TYPE SWCTC-AA

Swage Cable Center-Formed Terminal

A swage type cable center-formed terminal on a nema pad.

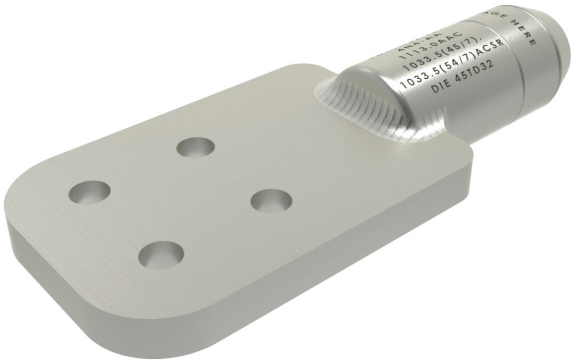

Material

Aluminum Alloy

Notes

- Prefilled with AFL Filler Compound (AFC) and capped.
- For Electro Tin plate add "-SN" to AFL No. EX: SWCTC2026-4N-AA-SN

ƒ —Machine Finish

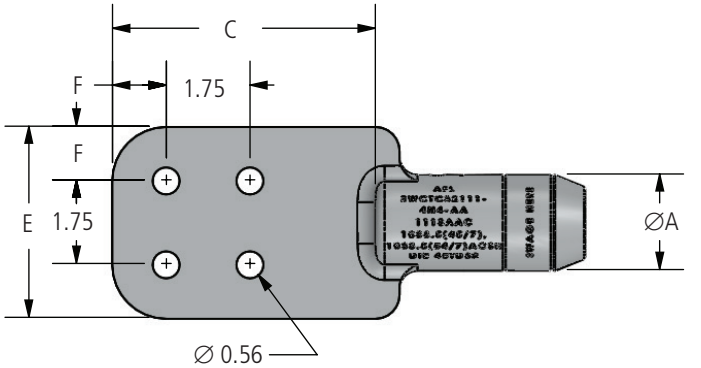

Pad Detail 2

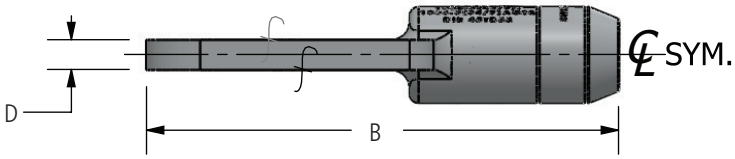

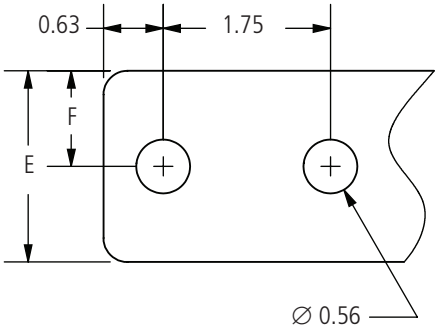

Pad Detail 1

Ordering Information

AFL NO.	CABLE SIZE		PAD DETAIL	DIMENSIONS IN INCHES						DIE SIZE
	AAC	ACSR		A	B	C	D	E	F	
SWCTC1613-2N-AA	2/0	1/0 (6/1)	1	1.00	7.50	4.25	0.38	2.00	1.00	45TD16
SWCTC1613-4N-AA			2	1.00	7.50	4.25	0.38	3.00	0.63	45TD16
SWCTC1613-4N4-AA			2	1.00	8.50	5.25	0.38	4.00	1.13	45TD16
SWCTC1617-2N-AA	3/0	2/0 (6/1)	1	1.00	7.50	4.25	0.38	2.00	1.00	45TD16
SWCTC1617-4N-AA			2	1.00	7.50	4.25	0.38	3.00	0.63	45TD16
SWCTC1617-4N4-AA			2	1.00	8.50	5.25	0.38	4.00	1.13	45TD16
SWCTC1621-2N-AA	4/0	3/0 (6/1)	1	1.00	7.50	4.25	0.38	2.00	1.00	45TD16
SWCTC1621-4N-AA			2	1.00	7.50	4.25	0.38	3.00	0.63	45TD16
SWCTC1621-4N4-AA			2	1.00	8.50	5.25	0.38	4.00	1.13	45TD16

continued →

© 2014, AFL, all rights reserved. PP-3-00786, Revision 6, 5.17.2021
Specifications are subject to change without notice.

TYPE SWCTC-AA
Swage Cable Center-Formed Terminal

Ordering Information

AFL NO.	CABLE SIZE		PAD DETAIL	DIMENSIONS IN INCHES						DIE SIZE
	AAC	ACSR		A	B	C	D	E	F	
SWCTC1625-2N-AA	250	4/0 (6/1)	1	1.00	7.50	4.25	0.38	2.00	1.00	45TD16
SWCTC1625-4N-AA			2	1.00	7.50	4.25	0.38	3.00	0.63	45TD16
SWCTC1625-4N4-AA			2	1.00	8.50	5.25	0.38	4.00	1.13	45TD16
SWCTC2026-2N-AA	266.8	266.8 (18/1)	1	1.25	8.00	4.25	0.63	2.00	1.00	45TD20
SWCTC2026-4N-AA			2	1.25	8.00	4.25	0.63	3.00	0.63	45TD20
SWCTC2026-4N4-AA			2	1.25	9.00	5.25	0.63	4.00	1.13	45TD20
SWCTC2030-2N-AA	300	266.8 (26/7)	1	1.25	8.00	4.25	0.63	2.00	1.00	45TD20
SWCTC2030-4N-AA			2	1.25	8.00	4.25	0.63	3.00	0.63	45TD20
SWCTC2030-4N4-AA			2	1.25	9.00	5.25	0.63	4.00	1.13	45TD20
SWCTC2035-2N-AA	336.4, 350	300 (26/7), 336.4 (18/1)	1	1.25	8.00	4.25	0.63	2.00	1.00	45TD20
SWCTC2035-4N-AA			2	1.25	8.00	4.25	0.63	3.00	0.63	45TD20
SWCTC2035-4N4-AA			2	1.25	9.00	5.25	0.63	4.00	1.13	45TD20
SWCTC2039-2N-AA	397.5	336.4 (26/7), 336.4 (30/7), 397.5 (18/1)	1	1.25	8.00	4.25	0.63	2.00	1.00	45TD20
SWCTC2039-4N-AA			2	1.25	8.00	4.25	0.63	3.00	0.63	45TD20
SWCTC2039-4N4-AA			2	1.25	9.00	5.25	0.63	4.00	1.13	45TD20
SWCTC2445-2N-AA	450	397.5 (24/7), 397.5 (26/7)	1	1.50	8.00	4.00	0.63	2.00	1.00	45TD24
SWCTC2445-4N-AA			2	1.50	8.00	4.00	0.63	3.00	0.63	45TD24
SWCTC2445-4N4-AA			2	1.50	9.00	5.00	0.63	4.00	1.13	45TD24
SWCTC2447-2N-AA	477	397.5 (30/7)	1	1.50	8.00	4.00	0.63	2.00	1.00	45TD24
SWCTC2447-4N-AA			2	1.50	8.00	4.00	0.63	3.00	0.63	45TD24
SWCTC2447-4N4-AA			2	1.50	9.00	5.00	0.63	4.00	1.13	45TD24
SWCTC2450-2N-AA	500	477 (18/1)	1	1.50	8.00	4.00	0.63	2.00	1.00	45TD24
SWCTC2450-4N-AA			2	1.50	8.00	4.00	0.63	3.00	0.63	45TD24
SWCTC2450-4N4-AA			2	1.50	9.00	5.00	0.63	4.00	1.13	45TD24
SWCTC2455-2N-AA	556.5	477 (24/7), 477 (26/7)	1	1.50	8.00	4.00	0.63	2.00	1.00	45TD24
SWCTC2455-4N-AA			2	1.50	8.00	4.00	0.63	3.00	0.63	45TD24
SWCTC2455-4N4-AA			2	1.50	9.00	5.00	0.63	4.00	1.13	45TD24
SWCTC2860-2N-AA	600	477 (30/7), 556.5 (18/1)	1	1.75	8.25	4.00	0.63	2.00	1.00	45TD28
SWCTC2860-4N-AA			2	1.75	8.25	4.00	0.63	3.00	0.63	45TD28
SWCTC2860-4N4-AA			2	1.75	9.25	5.00	0.63	4.00	1.13	45TD28
SWCTC2863-2N-AA	636	556.5 (24/7), 556.5 (26/7)	1	1.75	8.25	4.00	0.63	2.00	1.00	45TD28
SWCTC2863-4N-AA			2	1.75	8.25	4.00	0.63	3.00	0.63	45TD28
SWCTC2863-4N4-AA			2	1.75	9.25	5.00	0.63	4.00	1.13	45TD28
SWCTC2871-2N-AA	700, 715.5	556.5 (30/7), 605 (24/7), 605 (26/7), 636 (18/1), 636 (36/1)	1	1.75	8.25	4.00	0.63	2.00	1.00	45TD28
SWCTC2871-4N-AA			2	1.75	8.25	4.00	0.63	3.00	0.63	45TD28
SWCTC2871-4N4-AA			2	1.75	9.25	5.00	0.63	4.00	1.13	45TD28
SWCTC3075-2N-AA	750	605 (30/7), 605 (30/19), 636 (24/7), 636 (26/7)	1	1.88	8.25	4.00	0.63	2.00	1.00	45TD30
SWCTC3075-4N-AA			2	1.88	8.25	4.00	0.63	3.00	0.63	45TD30
SWCTC3075-4N4-AA			2	1.88	9.25	5.00	0.63	4.00	1.13	45TD30

continued

© 2014, AFL, all rights reserved. PP-3-00786, Revision 6, 5.17.2021
Specifications are subject to change without notice.

TYPE SWCTC-AA
Swage Cable Center-Formed Terminal

Ordering Information

AFL NO.	CABLE SIZE		PAD DETAIL	DIMENSIONS IN INCHES						DIE SIZE
	AAC	ACSR		A	B	C	D	E	F	
SWCTC3079-2N-AA	795	636 (30/7), 636 (30/19), 715.5 (24/7), 715.5 (54/7), 795 (36/1)	1	1.88	8.25	4.00	0.63	2.00	1.00	45TD30
SWCTC3079-4N-AA			2	1.88	8.25	4.00	0.63	3.00	0.63	45TD30
SWCTC3079-4N4-AA			2	1.88	9.25	5.00	0.63	4.00	1.13	45TD30
SWCTC3087-2N-AA	874.5	715.5 (26/7), 715.5 (30/19), 795 (45/7)	1	1.88	8.25	4.00	0.63	2.00	1.00	45TD30
SWCTC3087-4N-AA			2	1.88	8.25	4.00	0.63	3.00	0.63	45TD30
SWCTC3087-4N4-AA			2	1.88	9.25	5.00	0.63	4.00	1.13	45TD30
SWCTC3290-2N-AA	900	795 (24/7), 795 (54/7), 795 (26/7)	1	2.00	8.38	4.00	0.75	2.00	1.00	45TD32
SWCTC3290-4N-AA			2	2.00	8.38	4.00	0.75	3.00	0.63	45TD32
SWCTC3290-4N4-AA			2	2.00	9.38	5.00	0.75	4.00	1.13	45TD32
SWCTC3295-2N-AA	954	795 (30/19), 900 (45/7)	1	2.00	8.38	4.00	0.75	2.00	1.00	45TD32
SWCTC3295-4N-AA			2	2.00	8.38	4.00	0.75	3.00	0.63	45TD32
SWCTC3295-4N4-AA			2	2.00	9.38	5.00	0.75	4.00	1.13	45TD32
SWCTC32100-2N-AA	1000	874.5 (54/7), 900 (54/7), 954 (45/7)	1	2.00	8.38	4.00	0.75	2.00	1.00	45TD32
SWCTC32100-4N-AA			2	2.00	8.38	4.00	0.75	3.00	0.63	45TD32
SWCTC32100-4N4-AA			2	2.00	9.38	5.00	0.75	4.00	1.13	45TD32
SWCTC32103-4N-AA	1033.5	954 (54/7)	2	2.00	8.38	4.00	0.75	3.00	0.63	45TD32
SWCTC32103-4N4-AA			2	2.00	9.38	5.00	0.75	4.00	1.13	45TD32
SWCTC32111-4N-AA	1113	1033.5 (45/7), 1033.5 (54/7)	2	2.00	8.38	4.00	0.75	3.00	0.63	45TD32
SWCTC32111-4N4-AA			2	2.00	9.38	5.00	0.75	4.00	1.13	45TD32
SWCTC36119-4N-AA	1192.5	1113 (45/7)	2	2.25	8.75	4.00	0.75	3.00	0.63	45TD36
SWCTC36119-4N4-AA			2	2.25	9.75	5.00	0.75	4.00	1.13	45TD36
SWCTC36127-4N-AA	1272	1113 (54/19), 1192.5 (45/7)	2	2.25	8.75	4.00	0.75	3.00	0.63	45TD36
SWCTC36127-4N4-AA			2	2.25	9.75	5.00	0.75	4.00	1.13	45TD36
SWCTC36135-4N-AA	1351.5	1192.5 (54/19), 1272 (45/7)	2	2.25	8.75	4.00	0.75	3.00	0.63	45TD36
SWCTC36135-4N4-AA			2	2.25	9.75	5.00	0.75	4.00	1.13	45TD36
SWCTC36143-4N-AA	1431	1272 (54/19), 1351.5 (45/7)	2	2.25	8.75	4.00	0.75	3.00	0.63	45TD36
SWCTC36143-4N4-AA			2	2.25	9.75	5.00	0.75	4.00	1.13	45TD36
SWCTC36151-4N-AA	1510.5	1351.5 (54/19), 1431 (45/7)	2	2.25	8.75	4.00	0.75	3.00	0.63	45TD36
SWCTC36151-4N4-AA			2	2.25	9.75	5.00	0.75	4.00	1.13	45TD36
SWCTC36159-4N-AA	1590	1431 (54/19), 1510.5 (45/7)	2	2.25	8.75	4.00	0.75	3.00	0.63	45TD36
SWCTC36159-4N4-AA			2	2.25	9.75	5.00	0.75	4.00	1.13	45TD36
SWCTC36175-4N-AA	1750	1510.5 (54/19), 1590 (45/7)	2	2.25	8.75	4.00	0.75	3.00	0.63	45TD36
SWCTC36175-4N4-AA			2	2.25	9.75	5.00	0.75	4.00	1.13	45TD36
SWCTC36180-4N-AA	1800	1590 (54/19)	2	2.25	8.75	4.00	0.75	3.00	0.63	45TD36
SWCTC36180-4N4-AA			2	2.25	9.75	5.00	0.75	4.00	1.13	45TD36
SWCTC44200-4N-AA	2000	1780 (84/19)	2	2.75	9.38	4.00	1.00	3.00	0.63	65TD44
SWCTC44200-4N4-AA			2	2.75	10.38	5.00	1.00	4.00	1.13	65TD44
SWCTC44230-4N-AA	2250	2156 (84/19), 2167 (72/7)	2	2.75	9.38	4.00	1.00	3.00	0.63	65TD44
SWCTC44230-4N4-AA			2	2.75	10.38	5.00	1.00	4.00	1.13	65TD44
SWCTC44250-4N-AA	2500	2312 (76/19)	2	2.75	9.38	4.00	1.00	3.00	0.63	65TD44
SWCTC44250-4N4-AA			2	2.75	10.38	5.00	1.00	4.00	1.13	65TD44

© 2014, AFL, all rights reserved. PP-3-00786, Revision 6, 5.17.2021
Specifications are subject to change without notice.

TYPE SWCT-AA
Swage Offset Cable Terminal

A swage type cable terminal designed to terminate aluminum cables.

Material

Aluminum Alloy

Notes

- Bore will be lined with AFL Filler Compound (AFC) and capped.
- For Electro Tin plate add "-SN" to AFL No. EX: SWCT2026-4N-AA-SN

ƒ —Machine Finish

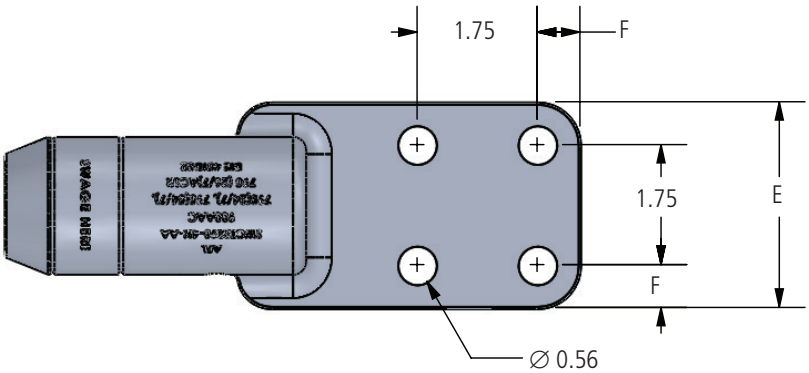

Pad Detail 2

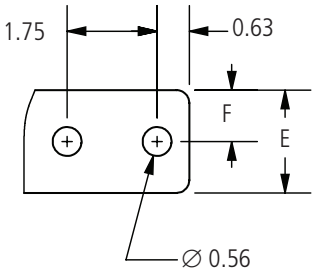

Pad Detail 1

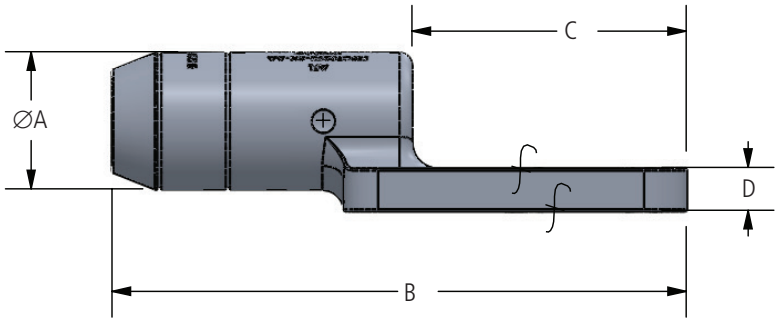

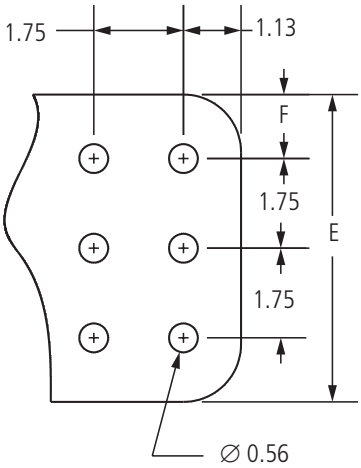

Pad Detail 3

continued

© 2014, AFL, all rights reserved. PP-3-00784, Revision 8, 7.6.2021
Specifications are subject to change without notice.

TYPE SWCT-AA
Swage Offset Cable Terminal

Ordering Information

AFL NO.	CABLE SIZE		PAD	DIMENSIONS IN INCHES						DIE	VOLTAGE
	AAC	ACSR	DETAIL	A	B	C	D	E	F	SIZE	RATING (KV)
SWCT1610-2N-AA	1/0	#1	1	1.00	7.25	4.00	0.38	2.00	1.00	45TD16	230
SWCT1610-4N-AA			2	1.00	7.25	4.00	0.38	3.00	0.63	45TD16	230
SWCT1610-4N4-AA			2	1.00	8.25	5.00	0.38	4.00	1.13	45TD16	230
SWCT1613-2N-AA	2/0	1/0 (6/1)	1	1.00	7.25	4.00	0.38	2.00	1.00	45TD16	230
SWCT1613-4N-AA			2	1.00	7.25	4.00	0.38	3.00	0.63	45TD16	230
SWCT1613-4N4-AA			2	1.00	8.25	5.00	0.38	4.00	1.13	45TD16	230
SWCT1617-2N-AA	3/0	2/0 (6/1)	1	1.00	7.25	4.00	0.38	2.00	1.00	45TD16	230
SWCT1617-4N-AA			2	1.00	7.25	4.00	0.38	3.00	0.63	45TD16	230
SWCT1617-4N4-AA			2	1.00	8.25	5.00	0.38	4.00	1.13	45TD16	230
SWCT1621-2N-AA	4/0	3/0 (6/1)	1	1.00	7.25	4.00	0.38	2.00	1.00	45TD16	230
SWCT1621-4N-AA			2	1.00	7.25	4.00	0.38	3.00	0.63	45TD16	230
SWCT1621-4N4-AA			2	1.00	8.25	5.00	0.38	4.00	1.13	45TD16	230
SWCT1625-2N-AA	250	4/0 (6/1)	1	1.00	7.25	4.00	0.38	2.00	1.00	45TD16	230
SWCT1625-4N-AA			2	1.00	7.25	4.00	0.38	3.00	0.63	45TD16	230
SWCT1625-4N4-AA			2	1.00	8.25	5.00	0.38	4.00	1.13	45TD16	230
SWCT2026-2N-AA	266.8	266.8 (18/1)	1	1.25	7.75	4.00	0.63	2.00	1.00	45TD20	230
SWCT2026-4N-AA			2	1.25	7.75	4.00	0.63	3.00	0.63	45TD20	345
SWCT2026-4N4-AA			2	1.25	8.25	4.50	0.63	4.00	1.13	45TD20	345
SWCT2030-2N-AA	300	266.8 (26/7)	1	1.25	7.75	4.00	0.63	2.00	1.00	45TD20	230
SWCT2030-4N-AA			2	1.25	7.75	4.00	0.63	3.00	0.63	45TD20	345
SWCT2030-4N4-AA			2	1.25	8.25	4.50	0.63	4.00	1.13	45TD20	345
SWCT2035-2N-AA	336.4, 350	300 (26/7), 336.4 (18/1)	1	1.25	7.75	4.00	0.63	2.00	1.00	45TD20	230
SWCT2035-4N-AA			2	1.25	7.75	4.00	0.63	3.00	0.63	45TD20	345
SWCT2035-4N4-AA			2	1.25	8.25	4.50	0.63	4.00	1.13	45TD20	345
SWCT2039-2N-AA	397.5	336.4 (26/7), 336.4 (30/7), 397.5 (18/1)	1	1.25	7.75	4.00	0.63	2.00	1.00	45TD20	230
SWCT2039-4N-AA			2	1.25	7.75	4.00	0.63	3.00	0.63	45TD20	345
SWCT2039-4N4-AA			2	1.25	8.25	4.50	0.63	4.00	1.13	45TD20	345
SWCT2445-2N-AA	450	397.5 (24/7), 397.5 (26/7)	1	1.50	7.88	3.88	0.63	2.00	1.00	45TD24	230
SWCT2445-4N-AA			2	1.50	7.88	3.88	0.63	3.00	0.63	45TD24	345
SWCT2445-4N4-AA			2	1.50	8.88	4.88	0.63	4.00	1.13	45TD24	345
SWCT2447-2N-AA	477	397.5 (30/7)	1	1.50	7.88	3.88	0.63	2.00	1.00	45TD24	230
SWCT2447-4N-AA			2	1.50	7.88	3.88	0.63	3.00	0.63	45TD24	345
SWCT2447-4N4-AA			2	1.50	8.88	4.88	0.63	4.00	1.13	45TD24	345
SWCT2450-2N-AA	500	477 (18/1)	1	1.50	7.88	3.88	0.63	2.00	1.00	45TD24	230
SWCT2450-4N-AA			2	1.50	7.88	3.88	0.63	3.00	0.63	45TD24	345
SWCT2450-4N4-AA			2	1.50	8.88	4.88	0.63	4.00	1.13	45TD24	345
SWCT2455-2N-AA	556.5	477 (24/7), 477 (26/7)	1	1.50	7.88	3.88	0.63	2.00	1.00	45TD24	230
SWCT2455-4N-AA			2	1.50	7.88	3.88	0.63	3.00	0.63	45TD24	345
SWCT2455-4N4-AA			2	1.50	8.88	4.88	0.63	4.00	1.13	45TD24	345

continued

© 2014, AFL, all rights reserved. PP-3-00784, Revision 8, 7.6.2021
Specifications are subject to change without notice.

TYPE SWCT-AA
Swage Offset Cable Terminal

Ordering Information

AFL NO.	CABLE SIZE		PAD	DIMENSIONS IN INCHES						DIE	VOLTAGE
	AAC	ACSR	DETAIL	A	B	C	D	E	F	SIZE	RATING (KV)
SWCT2860-2N-AA	600	477 (30/7), 556.5 (18/1)	1	1.75	8.25	4.00	0.63	2.00	1.00	45TD28	230
SWCT2860-4N-AA			2	1.75	8.25	4.00	0.63	3.00	0.63	45TD28	345
SWCT2860-4N4-AA			2	1.75	8.75	4.50	0.63	4.00	1.13	45TD28	345
SWCT2863-2N-AA	636	556.5 (24/7), 556.5 (26/7)	1	1.75	8.25	4.00	0.63	2.00	1.00	45TD28	230
SWCT2863-4N-AA			2	1.75	8.25	4.00	0.63	3.00	0.63	45TD28	345
SWCT2863-4N4-AA			2	1.75	8.75	4.50	0.63	4.00	1.13	45TD28	345
SWCT2871-2N-AA	700, 715.5	556.5 (30/7), 605 (24/7), 605 (26/7), 636 (18/1), 636 (36/1)	1	1.75	8.25	4.00	0.63	2.00	1.00	45TD28	230
SWCT2871-4N-AA			2	1.75	8.25	4.00	0.63	3.00	0.63	45TD28	345
SWCT2871-4N4-AA			2	1.75	8.75	4.50	0.63	4.00	1.13	45TD28	345
SWCT3075-2N-AA	750	605 (30/7), 605 (30/19), 636 (24/7), 636 (26/7)	1	1.88	8.25	4.00	0.63	2.00	1.00	45TD30	345
SWCT3075-4N-AA			2	1.88	8.25	4.00	0.63	3.00	0.63	45TD30	345
SWCT3075-4N4-AA			2	1.88	8.75	4.50	0.63	4.00	1.13	45TD30	345
SWCT3079-2N-AA	795	636 (30/7), 636 (30/19), 715.5 (24/7), 715.5 (54/7), 795 (36/1)	1	1.88	8.25	4.00	0.63	2.00	1.00	45TD30	345
SWCT3079-4N-AA			2	1.88	8.25	4.00	0.63	3.00	0.63	45TD30	345
SWCT3079-4N4-AA			2	1.88	8.75	4.50	0.63	4.00	1.13	45TD30	345
SWCT3087-2N-AA	874.5	715.5 (26/7), 715.5 (30/19), 795 (45/7)	1	1.88	8.25	4.00	0.63	2.00	1.00	45TD30	345
SWCT3087-4N-AA			2	1.88	8.25	4.00	0.63	3.00	0.63	45TD30	345
SWCT3087-4N4-AA			2	1.88	8.75	4.50	0.63	4.00	1.13	45TD30	345
SWCT3290-2N-AA	900	795 (24/7), 795 (54/7), 795 (26/7)	1	2.00	8.38	4.00	0.75	2.00	1.00	45TD32	345
SWCT3290-4N-AA			2	2.00	8.38	4.00	0.75	3.00	0.63	45TD32	345
SWCT3290-4N4-AA			2	2.00	8.88	4.50	0.75	4.00	1.13	45TD32	345
SWCT3295-2N-AA	954	795 (30/19), 900 (45/7)	1	2.00	8.38	4.00	0.75	2.00	1.00	45TD32	345
SWCT3295-4N-AA			2	2.00	8.38	4.00	0.75	3.00	0.63	45TD32	345
SWCT3295-4N4-AA			2	2.00	8.88	4.50	0.75	4.00	1.13	45TD32	345
SWCT32100-2N-AA	1000	874.5 (54/7), 900 (54/7), 954 (45/7)	1	2.00	8.38	4.00	0.75	2.00	1.00	45TD32	345
SWCT32100-4N-AA			2	2.00	8.38	4.00	0.75	3.00	0.63	45TD32	345
SWCT32100-4N4-AA			2	2.00	8.88	4.50	0.75	4.00	1.13	45TD32	345
SWCT32103-4N-AA	1033.5	954 (54/7)	2	2.00	8.38	4.00	0.75	3.00	0.63	45TD32	345
SWCT32103-4N4-AA			2	2.00	8.88	4.50	0.75	4.00	1.13	45TD32	345
SWCT32111-4N-AA	1113	1033.5 (45/7), 1033.5 (54/7)	2	2.00	8.38	4.00	0.75	3.00	0.63	45TD32	345
SWCT32111-4N4-AA			2	2.00	8.88	4.50	0.75	4.00	1.13	45TD32	345
SWCT36119-4N-AA	1192.5	1113 (45/7)	2	2.25	8.75	4.00	0.75	3.00	0.63	45TD36	345
SWCT36119-4N4-AA			2	2.25	9.25	4.50	0.75	4.00	1.13	45TD36	345
SWCT36127-2N-AA	1272	1113 (54/19), 1192.5 (45/7)	1	2.25	9.25	4.50	0.75	2.00	1.00	45TD36	230
SWCT36127-4N-AA			2	2.25	8.75	4.00	0.75	3.00	0.63	45TD36	345
SWCT36127-4N4-AA			2	2.25	9.25	4.50	0.75	4.00	1.13	45TD36	345

continued

© 2014, AFL, all rights reserved. PP-3-00784, Revision 8, 7.6.2021
Specifications are subject to change without notice.

TYPE SWCT-AA
Swage Offset Cable Terminal

Ordering Information

AFL NO.	CABLE SIZE		PAD	DIMENSIONS IN INCHES						DIE	VOLTAGE
	AAC	ACSR	DETAIL	A	B	C	D	E	F	SIZE	RATING (KV)
SWCT36135-4N-AA	1351.5	1192.5 (54/19), 1272 (45/7)	2	2.25	8.75	4.00	0.75	3.00	0.63	45TD36	345
SWCT36135-4N4-AA			2	2.25	9.25	4.50	0.75	4.00	1.13	45TD36	345
SWCT36143-4N-AA	1431	1272 (54/19), 1351.5 (45/7)	2	2.25	8.75	4.00	0.75	3.00	0.63	45TD36	345
SWCT36143-4N4-AA			2	2.25	9.25	4.50	0.75	4.00	1.13	45TD36	345
SWCT36151-4N-AA	1510.5	1351.5 (54/19), 1431 (45/7)	2	2.25	8.75	4.00	0.75	3.00	0.63	45TD36	345
SWCT36151-4N4-AA			2	2.25	9.25	4.50	0.75	4.00	1.13	45TD36	345
SWCT36151-6N4-AA			3	2.25	10.25	5.50	0.75	6.00	1.25	45TD36	345
SWCT36159-2N-AA	1590	1431 (54/19), 1510.5 (45/7)	1	2.25	8.75	4.00	0.75	2.00	1.00	45TD36	345
SWCT36159-4N-AA			2	2.25	8.75	4.00	0.75	3.00	0.63	45TD36	345
SWCT36159-4N4-AA			2	2.25	9.25	4.50	0.75	4.00	1.13	45TD36	345
SWCT36175-4N-AA	1750	1510.5 (54/19), 1590 (45/7)	2	2.25	8.75	4.00	0.75	3.00	0.63	45TD36	345
SWCT36175-4N4-AA			2	2.25	9.25	4.50	0.75	4.00	1.13	45TD36	345
SWCT36180-4N-AA	1800	1590 (54/19)	2	2.25	8.75	4.00	0.75	3.00	0.63	45TD36	345
SWCT36180-4N4-AA			2	2.25	9.25	4.50	0.75	4.00	1.13	45TD36	345
SWCT44200-4N-AA	2000	1780 (84/19)	2	2.75	9.38	4.00	1.00	3.00	0.63	65TD44	345
SWCT44200-4N4-AA			2	2.75	9.88	4.50	1.00	4.00	1.13	65TD44	345
SWCT44200-6N4-AA			3	2.75	9.88	4.50	1.00	6.00	1.13	65TD44	345
SWCT44193TW-4N4-AA	–	1926.9 (42/14) TW	2	2.75	10.88	5.50	1.00	4.00	1.13	65TD44	345
SWCT44230-4N-AA	2250	2156 (84/19), 2167 (72/7)	2	2.75	9.38	4.00	1.00	3.00	0.63	65TD44	345
SWCT44230-4N4-AA			2	2.75	9.88	4.50	1.00	4.00	1.13	65TD44	345
SWCT44250-4N-AA	2500	2312 (76/19)	2	2.75	9.38	4.00	1.00	3.00	0.63	65TD44	345
SWCT44250-4N4-AA			2	2.75	9.88	4.50	1.00	4.00	1.13	65TD44	345

© 2014, AFL, all rights reserved. PP-3-00784, Revision 8, 7.6.2021
Specifications are subject to change without notice.

TYPE SWCTA-AA
Swage Cable Angled Terminal

A swage type cable angled terminal on a nema pad.

Material

Aluminum Alloy

Notes

- Prefilled with AFL Filler Compound (AFC) and capped.
- For Electro Tin plate add "-SN" to AFL No.
  EX: SWCTA2026-4N-45-AA-SN

ƒ —Machine Finish

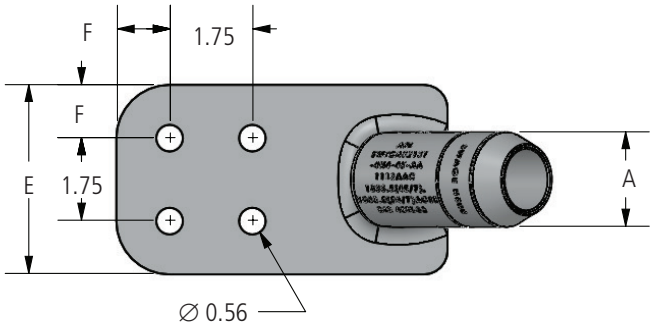

Pad Detail 2

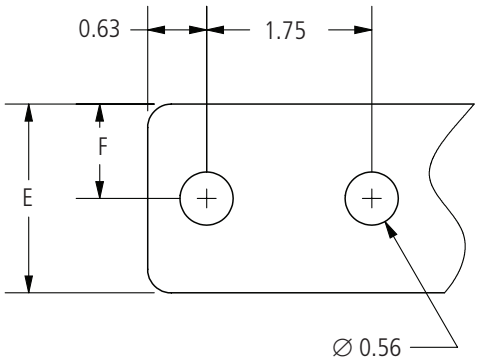

Pad Detail 1

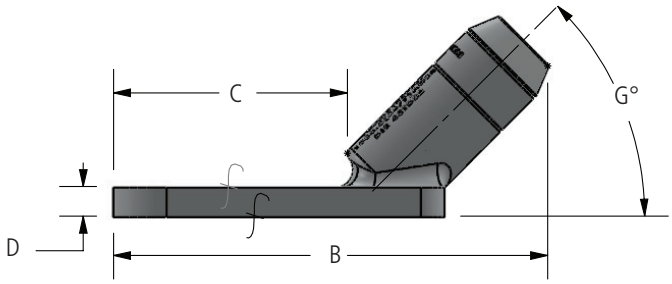

Ordering Information

AFL NO.	CABLE SIZE		PAD DETAIL	DIMENSIONS IN INCHES							DIE SIZE	VOLTAGE RATING (KV)
	AAC	ACSR		A	B	C	D	E	F	G		
SWCTA1613-2N-15-AA	2/0	1/0 (6/1)	1	1.00	7.20	3.84	0.38	2.00	1.00	15.0	45TD16	230
SWCTA1613-2N-45-AA			1	1.00	6.84	3.94	0.38	2.00	1.00	45.0	45TD16	230
SWCTA1613-4N-15-AA			2	1.00	7.20	3.84	0.38	3.00	0.63	15.0	45TD16	230
SWCTA1613-4N-45-AA			2	1.00	6.84	3.94	0.38	3.00	0.63	45.0	45TD16	230
SWCTA1613-4N4-15-AA			2	1.00	8.20	4.84	0.38	4.00	1.13	15.0	45TD16	230
SWCTA1613-4N4-45-AA			2	1.00	7.84	4.94	0.38	4.00	1.13	45.0	45TD16	230

continued →

© 2014, AFL, all rights reserved. PP-3-00785, Revision 4, 5.17.2021
Specifications are subject to change without notice.

TYPE SWCTA-AA
Swage Cable Angled Terminal

Ordering Information

AFL NO.	CABLE SIZE		PAD DETAIL	DIMENSIONS IN INCHES							DIE SIZE	VOLTAGE RATING (KV)
	AAC	ACSR		A	B	C	D	E	F	G		
SWCTA1617-2N-15-AA	3/0	2/0 (6/1)	1	1.00	7.20	3.84	0.38	2.00	1.00	15.0	45TD16	230
SWCTA1617-2N-45-AA			1	1.00	6.84	3.94	0.38	2.00	1.00	45.0	45TD16	230
SWCTA1617-4N-15-AA			2	1.00	7.20	3.84	0.38	3.00	0.63	15.0	45TD16	230
SWCTA1617-4N-45-AA			2	1.00	6.84	3.94	0.38	3.00	0.63	45.0	45TD16	230
SWCTA1617-4N4-15-AA			2	1.00	8.20	4.84	0.38	4.00	1.13	15.0	45TD16	230
SWCTA1617-4N4-45-AA			2	1.00	7.84	4.94	0.38	4.00	1.13	45.0	45TD16	230
SWCTA1621-2N-15-AA	4/0	3/0 (6/1)	1	1.00	7.20	3.84	0.38	2.00	1.00	15.0	45TD16	230
SWCTA1621-2N-45-AA			1	1.00	6.84	3.94	0.38	2.00	1.00	45.0	45TD16	230
SWCTA1621-4N-15-AA			2	1.00	7.20	3.84	0.38	3.00	0.63	15.0	45TD16	230
SWCTA1621-4N-45-AA			2	1.00	6.84	3.94	0.38	3.00	0.63	45.0	45TD16	230
SWCTA1621-4N4-15-AA			2	1.00	8.20	4.84	0.38	4.00	1.13	15.0	45TD16	230
SWCTA1621-4N4-45-AA			2	1.00	7.84	4.94	0.38	4.00	1.13	45.0	45TD16	230
SWCTA1625-2N-15-AA	250	4/0 (6/1)	1	1.00	7.20	3.84	0.38	2.00	1.00	15.0	45TD16	230
SWCTA1625-2N-45-AA			1	1.00	6.84	3.94	0.38	2.00	1.00	45.0	45TD16	230
SWCTA1625-4N-15-AA			2	1.00	7.20	3.84	0.38	3.00	0.63	15.0	45TD16	230
SWCTA1625-4N-45-AA			2	1.00	6.84	3.94	0.38	3.00	0.63	45.0	45TD16	230
SWCTA1625-4N4-15-AA			2	1.00	8.20	4.84	0.38	4.00	1.13	15.0	45TD16	230
SWCTA1625-4N4-45-AA			2	1.00	7.84	4.94	0.38	4.00	1.13	45.0	45TD16	230
SWCTA2026-2N-15-AA	266.8	266.8 (18/1)	1	1.25	7.67	3.78	0.63	2.00	1.00	15.0	45TD20	230
SWCTA2026-2N-45-AA			1	1.25	7.08	3.67	0.63	2.00	1.00	45.0	45TD20	230
SWCTA2026-4N-15-AA			2	1.25	7.67	3.78	0.63	3.00	0.63	15.0	45TD20	345
SWCTA2026-4N-45-AA			2	1.25	7.08	3.67	0.63	3.00	0.63	45.0	45TD20	345
SWCTA2026-4N4-15-AA			2	1.25	8.67	4.78	0.63	4.00	1.13	15.0	45TD20	345
SWCTA2026-4N4-45-AA			2	1.25	8.08	4.67	0.63	4.00	1.13	45.0	45TD20	345
SWCTA2030-2N-15-AA	300	266.8 (26/7)	1	1.25	7.67	3.78	0.63	2.00	1.00	15.0	45TD20	230
SWCTA2030-2N-45-AA			1	1.25	7.08	3.67	0.63	2.00	1.00	45.0	45TD20	230
SWCTA2030-4N-15-AA			2	1.25	7.67	3.78	0.63	3.00	0.63	15.0	45TD20	345
SWCTA2030-4N-45-AA			2	1.25	7.08	3.67	0.63	3.00	0.63	45.0	45TD20	345
SWCTA2030-4N4-15-AA			2	1.25	8.67	4.78	0.63	4.00	1.13	15.0	45TD20	345
SWCTA2030-4N4-45-AA			2	1.25	8.08	4.67	0.63	4.00	1.13	45.0	45TD20	345
SWCTA2035-2N-15-AA	336.4, 350	300 (26/7), 336.4 (18/1)	1	1.25	7.67	3.78	0.63	2.00	1.00	15.0	45TD20	230
SWCTA2035-2N-45-AA			1	1.25	7.08	3.67	0.63	2.00	1.00	45.0	45TD20	230
SWCTA2035-4N-15-AA			2	1.25	7.67	3.78	0.63	3.00	0.63	15.0	45TD20	345
SWCTA2035-4N-45-AA			2	1.25	7.08	3.67	0.63	3.00	0.63	45.0	45TD20	345
SWCTA2035-4N4-15-AA			2	1.25	8.67	4.78	0.63	4.00	1.13	15.0	45TD20	345
SWCTA2035-4N4-45-AA			2	1.25	8.08	4.67	0.63	4.00	1.13	45.0	45TD20	345

continued

© 2014, AFL, all rights reserved. PP-3-00785, Revision 4, 5.17.2021
Specifications are subject to change without notice.

TYPE SWCTA-AA
Swage Cable Angled Terminal

Ordering Information

AFL NO.	CABLE SIZE		PAD DETAIL	DIMENSIONS IN INCHES							DIE SIZE	VOLTAGE RATING (KV)
	AAC	ACSR		A	B	C	D	E	F	G		
SWCTA2039-2N-15-AA	397.5	336.4 (26/7), 336.4 (30/7), 397.5 (18/1)	1	1.25	7.67	3.78	0.63	2.00	1.00	15.0	45TD20	230
SWCTA2039-2N-45-AA			1	1.25	7.08	3.67	0.63	2.00	1.00	45.0	45TD20	230
SWCTA2039-4N-15-AA			2	1.25	7.67	3.78	0.63	3.00	0.63	15.0	45TD20	345
SWCTA2039-4N-45-AA			2	1.25	7.08	3.67	0.63	3.00	0.63	45.0	45TD20	345
SWCTA2039-4N4-15-AA			2	1.25	8.67	4.78	0.63	4.00	1.13	15.0	45TD20	345
SWCTA2039-4N4-45-AA			2	1.25	8.08	4.67	0.63	4.00	1.13	45.0	45TD20	345
SWCTA2445-2N-15-AA	450	397.5 (24/7), 397.5 (26/7)	1	1.50	8.40	4.21	0.63	2.00	1.00	15.0	45TD24	230
SWCTA2445-2N-30-AA			1	1.50	8.10	4.00	0.63	2.00	1.00	30.0	45TD24	230
SWCTA2445-2N-45-AA			1	1.50	7.64	3.91	0.63	2.00	1.00	45.0	45TD24	230
SWCTA2445-4N-15-AA			2	1.50	8.40	4.21	0.63	3.00	0.63	15.0	45TD24	345
SWCTA2445-4N-45-AA			2	1.50	7.64	3.91	0.63	3.00	0.63	45.0	45TD24	345
SWCTA2445-4N4-15-AA			2	1.50	9.40	5.21	0.63	4.00	1.13	15.0	45TD24	345
SWCTA2445-4N4-45-AA			2	1.50	8.64	4.91	0.63	4.00	1.13	45.0	45TD24	345
SWCTA2447-2N-15-AA	477	397.5 (30/7)	1	1.50	8.40	4.21	0.63	2.00	1.00	15.0	45TD24	230
SWCTA2447-2N-45-AA			1	1.50	7.64	3.91	0.63	2.00	1.00	45.0	45TD24	230
SWCTA2447-4N-15-AA			2	1.50	8.40	4.21	0.63	3.00	0.63	15.0	45TD24	345
SWCTA2447-4N-45-AA			2	1.50	7.64	3.91	0.63	3.00	0.63	45.0	45TD24	345
SWCTA2447-4N4-15-AA			2	1.50	9.40	5.21	0.63	4.00	1.13	15.0	45TD24	345
SWCTA2447-4N4-45-AA			2	1.50	8.64	4.91	0.63	4.00	1.13	45.0	45TD24	345
SWCTA2450-2N-15-AA	500	477 (18/1)	1	1.50	8.40	4.21	0.63	2.00	1.00	15.0	45TD24	230
SWCTA2450-2N-45-AA			1	1.50	7.64	3.91	0.63	2.00	1.00	45.0	45TD24	230
SWCTA2450-4N-15-AA			2	1.50	8.40	4.21	0.63	3.00	0.63	15.0	45TD24	345
SWCTA2450-4N-45-AA			2	1.50	7.64	3.91	0.63	3.00	0.63	45.0	45TD24	345
SWCTA2450-4N4-15-AA			2	1.50	9.40	5.21	0.63	4.00	1.13	15.0	45TD24	345
SWCTA2450-4N4-45-AA			2	1.50	8.64	4.91	0.63	4.00	1.13	45.0	45TD24	345
SWCTA2455-2N-15-AA	556.5	477 (24/7), 477 (26/7)	1	1.50	8.40	4.21	0.63	2.00	1.00	15.0	45TD24	230
SWCTA2455-2N-45-AA			1	1.50	7.64	3.91	0.63	2.00	1.00	45.0	45TD24	230
SWCTA2455-4N-15-AA			2	1.50	8.40	4.21	0.63	3.00	0.63	15.0	45TD24	345
SWCTA2455-4N-45-AA			2	1.50	7.64	3.91	0.63	3.00	0.63	45.0	45TD24	345
SWCTA2455-4N4-15-AA			2	1.50	9.40	5.21	0.63	4.00	1.13	15.0	45TD24	345
SWCTA2455-4N4-45-AA			2	1.50	8.64	4.91	0.63	4.00	1.13	45.0	45TD24	345
SWCTA2860-2N-15-AA	600	477 (30/7), 556.5 (18/1)	1	1.75	8.91	4.42	0.63	2.00	1.00	15.0	45TD28	230
SWCTA2860-2N-45-AA			1	1.75	8.19	4.14	0.63	2.00	1.00	45.0	45TD28	230
SWCTA2860-4N-15-AA			2	1.75	8.91	4.42	0.63	3.00	0.63	15.0	45TD28	345
SWCTA2860-4N-45-AA			2	1.75	8.19	4.14	0.63	3.00	0.63	45.0	45TD28	345
SWCTA2860-4N4-15-AA			2	1.75	9.41	4.92	0.63	4.00	1.13	15.0	45TD28	345
SWCTA2860-4N4-45-AA			2	1.75	8.69	4.64	0.63	4.00	1.13	45.0	45TD28	345

continued

© 2014, AFL, all rights reserved. PP-3-00785, Revision 4, 5.17.2021
Specifications are subject to change without notice.

TYPE SWCTA-AA
Swage Cable Angled Terminal

Ordering Information

AFL NO.	CABLE SIZE		PAD DETAIL	DIMENSIONS IN INCHES							DIE SIZE	VOLTAGE RATING (KV)
	AAC	ACSR		A	B	C	D	E	F	G		
SWCTA2863-2N-15-AA	636	556.5 (24/7), 556.5 (26/7)	1	1.75	8.91	4.42	0.63	2.00	1.00	15.0	45TD28	230
SWCTA2863-2N-45-AA			1	1.75	8.19	4.14	0.63	2.00	1.00	45.0	45TD28	230
SWCTA2863-4N-15-AA			2	1.75	8.91	4.42	0.63	3.00	0.63	15.0	45TD28	345
SWCTA2863-4N-45-AA			2	1.75	8.19	4.14	0.63	3.00	0.63	45.0	45TD28	345
SWCTA2863-4N4-15-AA			2	1.75	9.41	4.92	0.63	4.00	1.13	15.0	45TD28	345
SWCTA2863-4N4-45-AA			2	1.75	8.69	4.64	0.63	4.00	1.13	45.0	45TD28	345
SWCTA2871-2N-15-AA	700, 715.5	556.5 (30/7), 605 (24/7), 605 (26/7), 636 (18/1), 636 (36/1)	1	1.75	8.91	4.42	0.63	2.00	1.00	15.0	45TD28	230
SWCTA2871-2N-45-AA			1	1.75	8.19	4.14	0.63	2.00	1.00	45.0	45TD28	230
SWCTA2871-4N-15-AA			2	1.75	8.91	4.42	0.63	3.00	0.63	15.0	45TD28	345
SWCTA2871-4N-45-AA			2	1.75	8.19	4.14	0.63	3.00	0.63	45.0	45TD28	345
SWCTA2871-4N4-15-AA			2	1.75	9.41	4.92	0.63	4.00	1.13	15.0	45TD28	345
SWCTA2871-4N4-45-AA			2	1.75	8.69	4.64	0.63	4.00	1.13	45.0	45TD28	345
SWCTA3075-2N-15-AA	750	605 (30/7), 605 (30/19), 636 (24/7), 636 (26/7)	1	1.88	8.91	4.39	0.63	2.00	1.00	15.0	45TD30	230
SWCTA3075-2N-45-AA			1	1.88	8.15	4.01	0.63	2.00	1.00	45.0	45TD30	230
SWCTA3075-4N-15-AA			2	1.88	8.91	4.39	0.63	3.00	0.63	15.0	45TD30	345
SWCTA3075-4N-45-AA			2	1.88	8.15	4.01	0.63	3.00	0.63	45.0	45TD30	345
SWCTA3075-4N4-15-AA			2	1.88	9.41	4.89	0.63	4.00	1.13	15.0	45TD30	345
SWCTA3075-4N4-45-AA			2	1.88	8.65	4.51	0.63	4.00	1.13	45.0	45TD30	345
SWCTA3079-2N-15-AA	795	636 (30/7), 636 (30/19), 715.5 (24/7), 715.5 (54/7), 795 (36/1)	1	1.88	8.91	4.39	0.63	2.00	1.00	15.0	45TD30	230
SWCTA3079-2N-45-AA			1	1.88	8.15	4.01	0.63	2.00	1.00	45.0	45TD30	230
SWCTA3079-4N-15-AA			2	1.88	8.91	4.39	0.63	3.00	0.63	15.0	45TD30	345
SWCTA3079-4N-30-AA			2	1.88	8.61	4.12	0.63	3.00	0.63	30.0	45TD30	345
SWCTA3079-4N-45-AA			2	1.88	8.15	4.01	0.63	3.00	0.63	45.0	45TD30	345
SWCTA3079-4N4-15-AA			2	1.88	9.41	4.89	0.63	4.00	1.13	15.0	45TD30	345
SWCTA3079-4N4-45-AA			2	1.88	8.65	4.51	0.63	4.00	1.13	45.0	45TD30	345
SWCTA3087-2N-15-AA	874.5	715.5 (26/7), 715.5 (30/19), 795 (45/7)	1	1.88	8.91	4.39	0.63	2.00	1.00	15.0	45TD30	230
SWCTA3087-2N-45-AA			1	1.88	8.15	4.01	0.63	2.00	1.00	45.0	45TD30	230
SWCTA3087-4N-15-AA			2	1.88	8.91	4.39	0.63	3.00	0.63	15.0	45TD30	345
SWCTA3087-4N-45-AA			2	1.88	8.15	4.01	0.63	3.00	0.63	45.0	45TD30	345
SWCTA3087-4N4-15-AA			2	1.88	9.41	4.89	0.63	4.00	1.13	15.0	45TD30	345
SWCTA3087-4N4-45-AA			2	1.88	8.65	4.51	0.63	4.00	1.13	45.0	45TD30	345
SWCTA3290-2N-15-AA	900	795 (24/7), 795 (54/7), 795 (26/7)	1	2.00	9.03	4.36	0.75	2.00	1.00	15.0	45TD32	230
SWCTA3290-2N-45-AA			1	2.00	8.19	3.88	0.75	2.00	1.00	45.0	45TD32	230
SWCTA3290-4N-15-AA			2	2.00	9.03	4.36	0.75	3.00	0.63	15.0	45TD32	345
SWCTA3290-4N-45-AA			2	2.00	8.19	3.88	0.75	3.00	0.63	45.0	45TD32	345
SWCTA3290-4N4-15-AA			2	2.00	10.03	5.36	0.75	4.00	1.13	15.0	45TD32	345
SWCTA3290-4N4-45-AA			2	2.00	9.19	4.88	0.75	4.00	1.13	45.0	45TD32	345

continued

© 2014, AFL, all rights reserved. PP-3-00785, Revision 4, 5.17.2021
Specifications are subject to change without notice.

TYPE SWCTA-AA
Swage Cable Angled Terminal

Ordering Information

AFL NO.	CABLE SIZE		PAD DETAIL	DIMENSIONS IN INCHES							DIE SIZE	VOLTAGE RATING (KV)
	AAC	ACSR		A	B	C	D	E	F	G		
SWCTA3295-2N-15-AA	954	795 (30/19), 900 (45/7)	1	2.00	9.03	4.36	0.75	2.00	1.00	15.0	45TD32	230
SWCTA3295-2N-45-AA			1	2.00	8.19	3.88	0.75	2.00	1.00	45.0	45TD32	230
SWCTA3295-4N-15-AA			2	2.00	9.03	4.36	0.75	3.00	0.63	15.0	45TD32	345
SWCTA3295-4N-45-AA			2	2.00	8.19	3.88	0.75	3.00	0.63	45.0	45TD32	345
SWCTA3295-4N4-15-AA			2	2.00	10.03	5.36	0.75	4.00	1.13	15.0	45TD32	345
SWCTA3295-4N4-45-AA			2	2.00	9.19	4.88	0.75	4.00	1.13	45.0	45TD32	345
SWCTA32100-2N-15-AA	1000	874.5 (54/7), 900 (54/7), 954 (45/7)	1	2.00	9.03	4.36	0.75	2.00	1.00	15.0	45TD32	230
SWCTA32100-2N-45-AA			1	2.00	8.19	3.88	0.75	2.00	1.00	45.0	45TD32	230
SWCTA32100-4N-15-AA			2	2.00	9.03	4.36	0.75	3.00	0.63	15.0	45TD32	345
SWCTA32100-4N-45-AA			2	2.00	8.19	3.88	0.75	3.00	0.63	45.0	45TD32	345
SWCTA32100-4N4-15-AA			2	2.00	10.03	5.36	0.75	4.00	1.13	15.0	45TD32	345
SWCTA32100-4N4-45-AA			2	2.00	9.19	4.88	0.75	4.00	1.13	45.0	45TD32	345
SWCTA32103-4N-15-AA	1033.5	954 (54/7)	2	2.00	9.03	4.36	0.75	3.00	0.63	15.0	45TD32	345
SWCTA32103-4N-45-AA			2	2.00	8.19	3.88	0.75	3.00	0.63	45.0	45TD32	345
SWCTA32103-4N4-15-AA			2	2.00	10.03	5.36	0.75	4.00	1.13	15.0	45TD32	345
SWCTA32103-4N4-45-AA			2	2.00	9.19	4.88	0.75	4.00	1.13	45.0	45TD32	345
SWCTA32111-4N-15-AA	1113	1033.5 (45/7), 1033.5 (54/7)	2	2.00	9.03	4.36	0.75	3.00	0.63	15.0	45TD32	345
SWCTA32111-4N-45-AA			2	2.00	8.19	3.88	0.75	3.00	0.63	45.0	45TD32	345
SWCTA32111-4N4-15-AA			2	2.00	10.03	5.36	0.75	4.00	1.13	15.0	45TD32	345
SWCTA32111-4N4-45-AA			2	2.00	9.19	4.88	0.75	4.00	1.13	45.0	45TD32	345
SWCTA36119-4N-15-AA	1192.5	1113 (45/7)	2	2.25	9.67	4.57	0.75	3.00	0.63	15.0	45TD36	345
SWCTA36119-4N-45-AA			2	2.25	8.87	4.11	0.75	3.00	0.63	45.0	45TD36	345
SWCTA36119-4N4-15-AA			2	2.25	10.17	5.07	0.75	4.00	1.13	15.0	45TD36	345
SWCTA36119-4N4-45-AA			2	2.25	9.37	4.61	0.75	4.00	1.13	45.0	45TD36	345
SWCTA36127-4N-15-AA	1272	1113 (54/19), 1192.5 (45/7)	2	2.25	9.67	4.57	0.75	3.00	0.63	15.0	45TD36	345
SWCTA36127-4N-45-AA			2	2.25	8.87	4.11	0.75	3.00	0.63	45.0	45TD36	345
SWCTA36127-4N4-15-AA			2	2.25	10.17	5.07	0.75	4.00	1.13	15.0	45TD36	345
SWCTA36127-4N4-45-AA			2	2.25	9.37	4.61	0.75	4.00	1.13	45.0	45TD36	345
SWCTA36135-4N-15-AA	1351.5	1192.5 (54/19), 1272 (45/7)	2	2.25	9.67	4.57	0.75	3.00	0.63	15.0	45TD36	345
SWCTA36135-4N-30-AA			2	2.25	9.41	4.31	0.75	3.00	0.63	30.0	45TD36	345
SWCTA36135-4N-45-AA			2	2.25	8.87	4.11	0.75	3.00	0.63	45.0	45TD36	345
SWCTA36135-4N4-15-AA			2	2.25	10.17	5.07	0.75	4.00	1.13	15.0	45TD36	345
SWCTA36135-4N4-45-AA			2	2.25	9.37	4.61	0.75	4.00	1.13	45.0	45TD36	345
SWCTA36143-4N-15-AA	1431	1272 (54/19), 1351.5 (45/7)	2	2.25	9.67	4.57	0.75	3.00	0.63	15.0	45TD36	345
SWCTA36143-4N-45-AA			2	2.25	8.87	4.11	0.75	3.00	0.63	45.0	45TD36	345
SWCTA36143-4N4-15-AA			2	2.25	10.17	5.07	0.75	4.00	1.13	15.0	45TD36	345
SWCTA36143-4N4-45-AA			2	2.25	9.37	4.61	0.75	4.00	1.13	45.0	45TD36	345

continued

© 2014, AFL, all rights reserved. PP-3-00785, Revision 4, 5.17.2021
Specifications are subject to change without notice.

TYPE SWCTA-AA
Swage Cable Angled Terminal

Ordering Information

AFL NO.	CABLE SIZE		PAD DETAIL	DIMENSIONS IN INCHES							DIE SIZE	VOLTAGE RATING (KV)
	AAC	ACSR		A	B	C	D	E	F	G		
SWCTA36151-4N-15-AA	1510.5	1351.5 (54/19), 1431 (45/7)	2	2.25	9.67	4.57	0.75	3.00	0.63	15.0	45TD36	345
SWCTA36151-4N-45-AA			2	2.25	8.87	4.11	0.75	3.00	0.63	45.0	45TD36	345
SWCTA36151-4N4-15-AA			2	2.25	10.17	5.07	0.75	4.00	1.13	15.0	45TD36	345
SWCTA36151-4N4-45-AA			2	2.25	9.37	4.61	0.75	4.00	1.13	45.0	45TD36	345
SWCTA36159-4N-15-AA	1590	1431 (54/19), 1510.5 (45/7)	2	2.25	9.67	4.57	0.75	3.00	0.63	15.0	45TD36	345
SWCTA36159-4N-45-AA			2	2.25	8.87	4.11	0.75	3.00	0.63	45.0	45TD36	345
SWCTA36159-4N4-15-AA			2	2.25	10.17	5.07	0.75	4.00	1.13	15.0	45TD36	345
SWCTA36159-4N4-45-AA			2	2.25	9.37	4.61	0.75	4.00	1.13	45.0	45TD36	345
SWCTA36175-4N-15-AA	1750	1510.5 (54/19), 1590 (45/7)	2	2.25	9.67	4.57	0.75	3.00	0.63	15.0	45TD36	345
SWCTA36175-4N-45-AA			2	2.25	8.87	4.11	0.75	3.00	0.63	45.0	45TD36	345
SWCTA36175-4N4-15-AA			2	2.25	10.17	5.07	0.75	4.00	1.13	15.0	45TD36	345
SWCTA36175-4N4-45-AA			2	2.25	9.37	4.61	0.75	4.00	1.13	45.0	45TD36	345
SWCTA36180-4N-15-AA	1800	1590 (54/19)	2	2.25	9.67	4.57	0.75	3.00	0.63	15.0	45TD36	345
SWCTA36180-4N-45-AA			2	2.25	8.87	4.11	0.75	3.00	0.63	45.0	45TD36	345
SWCTA36180-4N4-15-AA			2	2.25	10.17	5.07	0.75	4.00	1.13	15.0	45TD36	345
SWCTA36180-4N4-45-AA			2	2.25	9.37	4.61	0.75	4.00	1.13	45.0	45TD36	345
SWCTA44200-4N-15-AA	2000	1780 (84/19)	2	2.75	10.31	4.49	1.00	3.00	0.63	15.0	65TD44	345
SWCTA44200-4N-45-AA			2	2.75	9.60	4.08	1.00	3.00	0.63	45.0	65TD44	345
SWCTA44200-4N4-15-AA			2	2.75	10.81	4.99	1.00	4.00	1.13	15.0	65TD44	345
SWCTA44200-4N4-45-AA			2	2.75	10.10	4.58	1.00	4.00	1.13	45.0	65TD44	345
SWCTA44230-4N-15-AA	2250	2156 (84/19), 2167 (72/7)	2	2.75	10.31	4.49	1.00	3.00	0.63	15.0	65TD44	345
SWCTA44230-4N-45-AA			2	2.75	9.60	4.08	1.00	3.00	0.63	45.0	65TD44	345
SWCTA44230-4N4-15-AA			2	2.75	10.81	4.99	1.00	4.00	1.13	15.0	65TD44	345
SWCTA44230-4N4-45-AA			2	2.75	10.10	4.58	1.00	4.00	1.13	45.0	65TD44	345
SWCTA44250-4N-15-AA	2500	2312 (76/19)	2	2.75	10.31	4.49	1.00	3.00	0.63	15.0	65TD44	345
SWCTA44250-4N-45-AA			2	2.75	9.60	4.08	1.00	3.00	0.63	45.0	65TD44	345
SWCTA44250-4N4-15-AA			2	2.75	10.81	4.99	1.00	4.00	1.13	15.0	65TD44	345
SWCTA44250-4N4-45-AA			2	2.75	10.10	4.58	1.00	4.00	1.13	45.0	65TD44	345

© 2014, AFL, all rights reserved. PP-3-00785, Revision 4, 5.17.2021
Specifications are subject to change without notice.

TYPE SWCTA-90-AA
Swage Cable 90-Degree Terminal

A swage type cable 90 degree terminal on a nema pad.

Material

Aluminum Alloy

Notes

- Prefilled with AFL Filler Compound (AFC) and capped.
- For Electro Tin plate add "-SN" to AFL No.
  EX: SWCTA2026-4N-90-AA-SN

ƒ —Machine Finish

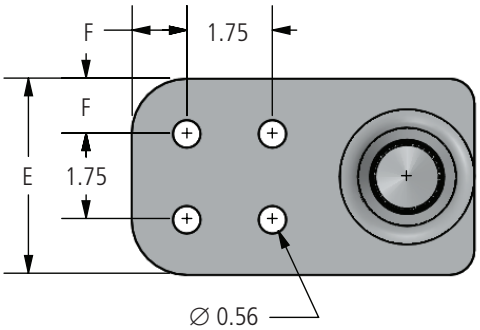

Pad Detail 2

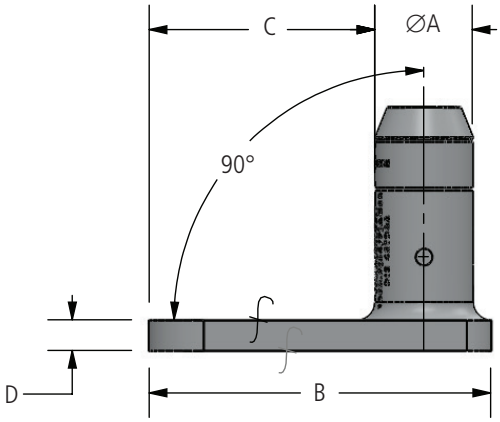

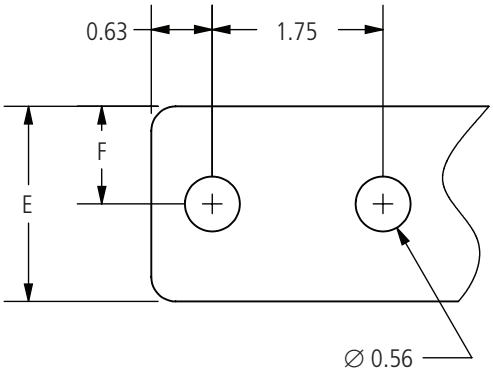

Pad Detail 1

Ordering Information

AFL NO.	CABLE RANGE		PAD DETAIL	DIMENSIONS IN INCHES						DIE SIZE
	AAC	ACSR		A	B	C	D	E	F	
SWCTA1613-2N-90-AA	2/0	1/0 (6/1)	1	1.00	5.00	3.50	0.38	2.00	1.00	45TD16
SWCTA1613-4N-90-AA			2	1.00	5.00	3.50	0.38	3.00	0.63	45TD16
SWCTA1613-4N4-90-AA			2	1.00	6.00	4.50	0.38	4.00	1.13	45TD16
SWCTA1617-2N-90-AA	3/0	2/0 (6/1)	1	1.00	5.00	3.50	0.38	2.00	1.00	45TD16
SWCTA1617-4N-90-AA			2	1.00	5.00	3.50	0.38	3.00	0.63	45TD16
SWCTA1617-4N4-90-AA			2	1.00	6.00	4.50	0.38	4.00	1.13	45TD16

continued →

© 2014, AFL, all rights reserved. PP-3-00783, Revision 6, 3.2.2023
Specifications are subject to change without notice.

TYPE SWCTA-90-AA
Swage Cable 90-Degree Terminal

Ordering Information

AFL NO.	CABLE RANGE		PAD	DIMENSIONS IN INCHES						DIE SIZE
	AAC	ACSR	DETAIL	A	B	C	D	E	F	
SWCTA1621-2N-90-AA	4/0	3/0 (6/1)	1	1.00	5.00	3.50	0.38	2.00	1.00	45TD16
SWCTA1621-4N-90-AA			2	1.00	5.00	3.50	0.38	3.00	0.63	45TD16
SWCTA1621-4N4-90-AA			2	1.00	6.00	4.50	0.38	4.00	1.13	45TD16
SWCTA1625-2N-90-AA	250	4/0 (6/1)	1	1.00	5.00	3.50	0.38	2.00	1.00	45TD16
SWCTA1625-4N-90-AA			2	1.00	5.00	3.50	0.38	3.00	0.63	45TD16
SWCTA1625-4N4-90-AA			2	1.00	6.00	4.50	0.38	4.00	1.13	45TD16
SWCTA2026-2N-90-AA	266.8	266.8 (18/1)	1	1.25	6.00	4.50	0.63	2.00	1.00	45TD20
SWCTA2026-4N-90-AA			2	1.25	5.50	4.00	0.63	3.00	0.63	45TD20
SWCTA2026-4N4-90-AA			2	1.25	6.50	5.00	0.63	4.00	1.13	45TD20
SWCTA2030-2N-90-AA	300	266.8 (26/7)	1	1.25	6.00	4.50	0.63	2.00	1.00	45TD20
SWCTA2030-4N-90-AA			2	1.25	5.50	4.00	0.63	3.00	0.63	45TD20
SWCTA2030-4N4-90-AA			2	1.25	6.50	5.00	0.63	4.00	1.13	45TD20
SWCTA2035-2N-90-AA	336.4, 350	300 (26/7), 336.4 (18/1)	1	1.25	6.00	4.50	0.63	2.00	1.00	45TD20
SWCTA2035-4N-90-AA			2	1.25	5.50	4.00	0.63	3.00	0.63	45TD20
SWCTA2035-4N4-90-AA			2	1.25	6.50	5.00	0.63	4.00	1.13	45TD20
SWCTA2039-2N-90-AA	397.5	336.4 (26/7), 336.4 (30/7), 397.5 (18/1)	1	1.25	5.00	3.50	0.63	2.00	1.00	45TD20
SWCTA2039-4N-90-AA			2	1.25	5.50	4.00	0.63	3.00	0.63	45TD20
SWCTA2039-4N4-90-AA			2	1.25	6.50	5.00	0.63	4.00	1.13	45TD20
SWCTA2445-2N-90-AA	450	397.5 (24/7), 397.5 (25/7)	1	1.50	6.00	4.13	0.63	2.00	1.00	45TD24
SWCTA2445-4N-90-AA			2	1.50	6.00	4.13	0.63	3.00	0.63	45TD24
SWCTA2445-4N4-90-AA			2	1.50	6.50	4.63	0.63	4.00	1.13	45TD24
SWCTA2447-2N-90-AA	477	397.5 (30/7)	1	1.50	6.00	4.13	0.63	2.00	1.00	45TD24
SWCTA2447-4N-90-AA			2	1.50	6.00	4.13	0.63	3.00	0.63	45TD24
SWCTA2447-4N4-90-AA			2	1.50	6.50	4.63	0.63	4.00	1.13	45TD24
SWCTA2450-2N-90-AA	500	477 (18/1)	1	1.50	6.00	4.13	0.63	2.00	1.00	45TD24
SWCTA2450-4N-90-AA			2	1.50	6.00	4.13	0.63	3.00	0.63	45TD24
SWCTA2450-4N4-90-AA			2	1.50	6.50	4.63	0.63	4.00	1.13	45TD24
SWCTA2455-2N-90-AA	556.5	477 (24/7), 477 (26/7)	1	1.50	6.00	4.13	0.63	2.00	1.00	45TD24
SWCTA2455-4N-90-AA			2	1.50	6.00	4.13	0.63	3.00	0.63	45TD24
SWCTA2455-4N4-90-AA			2	1.50	6.50	4.63	0.63	4.00	1.13	45TD24
SWCTA2860-2N-90-AA	600	477 (30/7), 556.5 (18/1)	1	1.75	6.00	3.88	0.63	2.00	1.00	45TD28
SWCTA2860-4N-90-AA			2	1.75	6.00	3.88	0.63	3.00	0.63	45TD28
SWCTA2860-4N4-90-AA			2	1.75	7.00	4.88	0.63	4.00	1.13	45TD28
SWCTA2863-2N-90-AA	636	556.5 (24/7), 556.5 (26/7)	1	1.75	5.50	3.38	0.63	2.00	1.00	45TD28
SWCTA2863-4N-90-AA			2	1.75	6.00	3.88	0.63	3.00	0.63	45TD28
SWCTA2863-4N4-90-AA			2	1.75	7.00	4.88	0.63	4.00	1.13	45TD28
SWCTA2871-2N-90-AA	700, 715.5	556.5 (30/7), 605 (24/7), 605 (26/7), 636 (18/1), 636 (36/1)	1	1.75	5.50	3.38	0.63	2.00	1.00	45TD28
SWCTA2871-4N-90-AA			2	1.75	6.00	3.88	0.63	3.00	0.63	45TD28
SWCTA2871-4N4-90-AA			2	1.75	7.00	4.88	0.63	4.00	1.13	45TD28
SWCTA3075-2N-90-AA	750	605 (30/7), 605 (30/19), 636 (24/7), 636 (26/7)	1	1.88	6.00	3.75	0.63	2.00	1.00	45TD30
SWCTA3075-4N-90-AA			2	1.88	6.00	3.75	0.63	3.00	0.63	45TD30
SWCTA3075-4N4-90-AA			2	1.88	7.00	4.75	0.63	4.00	1.13	45TD30

continued

© 2014, AFL, all rights reserved. PP-3-00783, Revision 6, 3.2.2023
Specifications are subject to change without notice.

TYPE SWCTA-90-AA
Swage Cable 90-Degree Terminal

Ordering Information

AFL NO.	CABLE RANGE		PAD	DIMENSIONS IN INCHES						DIE SIZE
	AAC	ACSR	DETAIL	A	B	C	D	E	F	
SWCTA3079-2N-90-AA	795	636 (30/7), 636 (30/19), 715.5 (24/7), 715.5 (54/7), 795 (36/1)	1	1.88	6.00	3.75	0.63	2.00	1.00	45TD30
SWCTA3079-4N-90-AA			2	1.88	6.00	3.75	0.63	3.00	0.63	45TD30
SWCTA3079-4N4-90-AA			2	1.88	7.00	4.75	0.63	4.00	1.13	45TD30
SWCTA3087-2N-90-AA	874.5	715.5 (26/7), 715.5 (30/19), 795 (45/7)	1	1.88	6.00	3.75	0.63	2.00	1.00	45TD30
SWCTA3087-4N-90-AA			2	1.88	6.00	3.75	0.63	3.00	0.63	45TD30
SWCTA3087-4N4-90-AA			2	1.88	7.00	4.75	0.63	4.00	1.13	45TD30
SWCTA3290-2N-90-AA	900	795 (24/7), 795 (54/7), 795 (26/7)	1	2.00	6.00	3.63	0.75	2.00	1.00	45TD32
SWCTA3290-4N-90-AA			2	2.00	6.50	4.13	0.75	3.00	0.63	45TD32
SWCTA3290-4N4-90-AA			2	2.00	7.00	4.63	0.75	4.00	1.13	45TD32
SWCTA3295-2N-90-AA	954	795 (30/19), 900 (45/7)	1	2.00	6.00	3.63	0.75	2.00	1.00	45TD32
SWCTA3295-4N-90-AA			2	2.00	6.50	4.13	0.75	3.00	0.63	45TD32
SWCTA3295-4N4-90-AA			2	2.00	7.00	4.63	0.75	4.00	1.13	45TD32
SWCTA32100-2N-90-AA	1000	874.5 (54/7), 900 (54/7), 954 (45/7)	1	2.00	6.00	3.63	0.75	2.00	1.00	45TD32
SWCTA32100-4N-90-AA			2	2.00	6.50	4.13	0.75	3.00	0.63	45TD32
SWCTA32100-4N4-90-AA			2	2.00	7.00	4.63	0.75	4.00	1.13	45TD32
SWCTA32103-4N-90-AA	1033.5	954 (54/7)	2	2.00	6.50	4.13	0.75	3.00	0.63	45TD32
SWCTA32103-4N4-90-AA			2	2.00	7.00	4.63	0.75	4.00	1.13	45TD32
SWCTA32111-4N-90-AA	1113	1033.5 (45/7), 1033.5 (54/7)	2	2.00	6.00	3.63	0.75	3.00	0.63	45TD32
SWCTA32111-4N4-90-AA			2	2.00	7.00	4.63	0.75	4.00	1.13	45TD32
SWCTA36119-4N-90-AA	1192.5	1113 (45/7)	2	2.25	6.50	3.88	0.75	3.00	0.63	45TD36
SWCTA36119-4N4-90-AA			2	2.25	7.50	4.88	0.75	4.00	1.13	45TD36
SWCTA36127-4N-90-AA	1272	1113 (54/19), 1192.5 (45/7)	2	2.25	6.50	3.88	0.75	3.00	0.63	45TD36
SWCTA36127-4N4-90-AA			2	2.25	7.50	4.88	0.75	4.00	1.13	45TD36
SWCTA36135-4N-90-AA	1351.5	1192.5 (54/19), 1272 (45/7)	2	2.25	6.50	3.88	0.75	3.00	0.63	45TD36
SWCTA36135-4N4-90-AA			2	2.25	7.50	4.88	0.75	4.00	1.13	45TD36
SWCTA36143-4N-90-AA	1431	1272 (54/19), 1351.5 (45/7)	2	2.25	6.50	3.88	0.75	3.00	0.63	45TD36
SWCTA36143-4N4-90-AA			2	2.25	7.50	4.88	0.75	4.00	1.13	45TD36
SWCTA36151-4N-90-AA	1510.5	1351.5 (54/19), 1431 (45/7)	2	2.25	6.50	3.88	0.75	3.00	0.63	45TD36
SWCTA36151-4N4-90-AA			2	2.25	7.50	4.88	0.75	4.00	1.13	45TD36
SWCTA36159-4N-90-AA	1590	1431 (54/19), 1510.5 (45/7)	2	2.25	6.50	3.88	0.75	3.00	0.63	45TD36
SWCTA36159-4N4-90-AA			2	2.25	7.50	4.88	0.75	4.00	1.13	45TD36
SWCTA36175-4N-90-AA	1750	1510.5 (54/19), 1590 (45/7)	2	2.25	6.50	3.88	0.75	3.00	0.63	45TD36
SWCTA36175-4N4-90-AA			2	2.25	7.50	4.88	0.75	4.00	1.13	45TD36
SWCTA36180-4N-90-AA	1800	1590 (54/19)	2	2.25	6.50	3.88	0.75	3.00	0.63	45TD36
SWCTA36180-4N4-90-AA			2	2.25	7.50	4.88	0.75	4.00	1.13	45TD36
SWCTA44200-4N-90-AA	2000	1780 (84/19)	2	2.75	7.00	3.88	1.00	3.00	0.63	65TD44
SWCTA44200-4N4-90-AA			2	2.75	8.00	4.88	1.00	4.00	1.13	65TD44
SWCTA44230-4N-90-AA	2250	2156 (84/19), 2167 (72/7)	2	2.75	7.00	3.88	1.00	3.00	0.63	65TD44
SWCTA44230-4N4-90-AA			2	2.75	8.00	4.88	1.00	4.00	1.13	65TD44
SWCTA44250-4N-90-AA	2500	2312 (76/19)	2	2.75	7.00	3.88	1.00	3.00	0.63	65TD44
SWCTA44250-4N4-90-AA			2	2.75	8.00	4.88	1.00	4.00	1.13	65TD44

© 2014, AFL, all rights reserved. PP-3-00783, Revision 6, 3.2.2023
Specifications are subject to change without notice.

TYPE SW2CT-AA

Swage Two Offset Cable Terminal

A swage type two cable offset terminals on a nema pad.

Material

Aluminum Alloy

Notes

- Prefilled with AFL Filler Compound (AFC) and capped.
- For Electro Tin plate add "-SN" to AFL No.
  EX: SW2CT2026-4N-AA-SN
- For 5 inch, 8 inch or 18 inch cable spacing add "-XX" to AFL No.
  EX: SW2CT2026-18-4N-AA

ƒ —Machine Finish

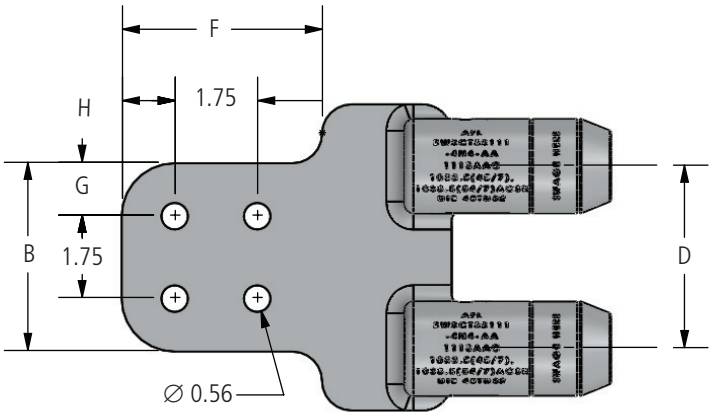

Pad Detail 1

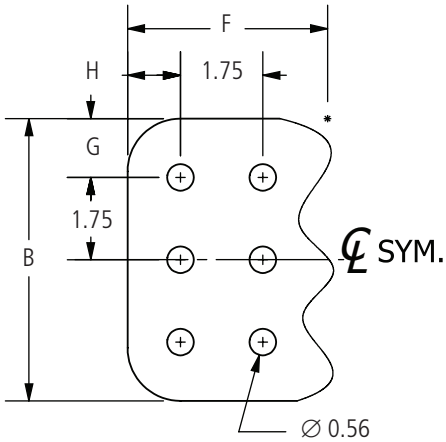

Pad Detail 2

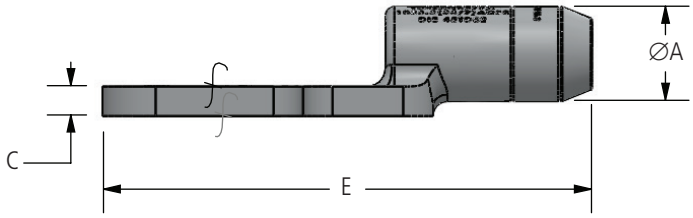

continued

© 2014, AFL, all rights reserved. PP-3-00663, Revision 4, 5.24.2021
Specifications are subject to change without notice.

TYPE SW2CT-AA
Swage Two Offset Cable Terminal

Ordering Information

AFL NO.	CABLE SIZE		PAD	DIMENSIONS IN INCHES								DIE SIZE
	AAC	ACSR	DETAIL	A	B	C	D	E	F	G	H	
SW2CT1613-4N-AA	2/0	1/0 (6/1)	1	1.00	3.00	0.50	2.75	7.75	3.25	0.63	0.63	45TD16
SW2CT1613-4N4-AA			1	1.00	4.00	0.50	2.75	8.75	4.25	1.13	1.13	45TD16
SW2CT1613-5N4-AA			2	1.00	5.00	0.50	2.75	8.75	4.25	0.75	1.13	45TD16
SW2CT1613-6N4-AA			2	1.00	6.00	0.50	2.75	8.75	4.25	1.25	1.13	45TD16
SW2CT1617-4N-AA	3/0	2/0 (6/1)	1	1.00	3.00	0.50	2.75	7.75	3.25	0.63	0.63	45TD16
SW2CT1617-4N4-AA			1	1.00	4.00	0.50	2.75	8.75	4.25	1.13	1.13	45TD16
SW2CT1617-5N4-AA			2	1.00	5.00	0.50	2.75	8.75	4.25	0.75	1.13	45TD16
SW2CT1617-6N4-AA			2	1.00	6.00	0.50	2.75	8.75	4.25	1.25	1.13	45TD16
SW2CT1621-4N-AA	4/0	3/0 (6/1)	1	1.00	3.00	0.50	2.75	7.75	3.25	0.63	0.63	45TD16
SW2CT1621-4N4-AA			1	1.00	4.00	0.50	2.75	8.75	4.25	1.13	1.13	45TD16
SW2CT1621-5N4-AA			2	1.00	5.00	0.50	2.75	8.75	4.25	0.75	1.13	45TD16
SW2CT1621-6N4-AA			2	1.00	6.00	0.50	2.75	8.75	4.25	1.25	1.13	45TD16
SW2CT1625-4N-AA	250	4/0 (6/1)	1	1.00	3.00	0.50	2.75	7.75	3.25	0.63	0.63	45TD16
SW2CT1625-4N4-AA			1	1.00	4.00	0.50	2.75	8.75	4.25	1.13	1.13	45TD16
SW2CT1625-5N4-AA			2	1.00	5.00	0.50	2.75	8.75	4.25	0.75	1.13	45TD16
SW2CT1625-6N4-AA			2	1.00	6.00	0.50	2.75	8.75	4.25	1.25	1.13	45TD16
SW2CT2026-4N-AA	266.8	266.8 (18/1)	1	1.25	3.00	0.50	2.75	8.25	3.25	0.63	0.63	45TD20
SW2CT2026-4N4-AA			1	1.25	4.00	0.50	2.75	9.25	4.25	1.13	1.13	45TD20
SW2CT2026-5N4-AA			2	1.25	5.00	0.50	2.75	9.25	4.25	0.75	1.13	45TD20
SW2CT2026-6N4-AA			2	1.25	6.00	0.50	2.75	9.25	4.25	1.25	1.13	45TD20
SW2CT2030-4N-AA	300	266.8 (26/7)	1	1.25	3.00	0.50	2.75	8.25	3.25	0.63	0.63	45TD20
SW2CT2030-4N4-AA			1	1.25	4.00	0.50	2.75	9.25	4.25	1.13	1.13	45TD20
SW2CT2030-5N4-AA			2	1.25	5.00	0.50	2.75	9.25	4.25	0.75	1.13	45TD20
SW2CT2030-6N4-AA			2	1.25	6.00	0.50	2.75	9.25	4.25	1.25	1.13	45TD20
SW2CT2035-4N-AA	336.4, 350	300 (26/7), 336.4 (18/1)	1	1.25	3.00	0.50	2.75	8.25	3.25	0.63	0.63	45TD20
SW2CT2035-4N4-AA			1	1.25	4.00	0.50	2.75	9.25	4.25	1.13	1.13	45TD20
SW2CT2035-5N4-AA			2	1.25	5.00	0.50	2.75	9.25	4.25	0.75	1.13	45TD20
SW2CT2035-6N4-AA			2	1.25	6.00	0.50	2.75	9.25	4.25	1.25	1.13	45TD20
SW2CT2039-4N-AA	397.5	336.4 (26/7), 336.4 (30/7), 397.5 (18/1)	1	1.25	3.00	0.50	2.75	8.25	3.25	0.63	0.63	45TD20
SW2CT2039-4N4-AA			1	1.25	4.00	0.50	2.75	9.25	4.25	1.13	1.13	45TD20
SW2CT2039-5N4-AA			2	1.25	5.00	0.50	2.75	9.25	4.25	0.75	1.13	45TD20
SW2CT2039-6N4-AA			2	1.25	6.00	0.50	2.75	9.25	4.25	1.25	1.13	45TD20
SW2CT2445-4N-AA	450	397.5 (24/7), 397.5 (26/7)	1	1.50	3.00	0.50	3.63	8.38	3.25	0.63	0.63	45TD24
SW2CT2445-4N4-AA			1	1.50	4.00	0.50	3.63	9.38	4.25	1.13	1.13	45TD24
SW2CT2445-5N4-AA			2	1.50	5.00	0.50	3.63	9.38	4.25	0.75	1.13	45TD24
SW2CT2445-6N4-AA			2	1.50	6.00	0.50	3.63	10.38	4.25	1.25	1.13	45TD24
SW2CT2447-4N-AA	477	397.5 (30/7)	1	1.50	3.00	0.50	3.63	8.38	3.25	0.63	0.63	45TD24
SW2CT2447-4N4-AA			1	1.50	4.00	0.50	3.63	9.38	4.25	1.13	1.13	45TD24
SW2CT2447-5N4-AA			2	1.50	5.00	0.50	3.63	9.38	4.25	0.75	1.13	45TD24
SW2CT2447-6N4-AA			2	1.50	6.00	0.50	3.63	10.38	4.25	1.25	1.13	45TD24
SW2CT2450-4N-AA	500	477 (18/1)	1	1.50	3.00	0.50	3.63	8.38	3.25	0.63	0.63	45TD24
SW2CT2450-4N4-AA			1	1.50	4.00	0.50	3.63	9.38	4.25	1.13	1.13	45TD24
SW2CT2450-5N4-AA			2	1.50	5.00	0.50	3.63	9.38	4.25	0.75	1.13	45TD24
SW2CT2450-6N4-AA			2	1.50	6.00	0.50	3.63	10.38	4.25	1.25	1.13	45TD24
SW2CT2455-4N-AA	556.5	477 (24/7), 477 (26/7)	1	1.50	3.00	0.50	3.63	8.38	3.25	0.63	0.63	45TD24
SW2CT2455-4N4-AA			1	1.50	4.00	0.50	3.63	9.38	4.25	1.13	1.13	45TD24
SW2CT2455-5N4-AA			2	1.50	5.00	0.50	3.63	9.38	4.25	0.75	1.13	45TD24
SW2CT2455-6N4-AA			2	1.50	6.00	0.50	3.63	10.38	4.25	1.25	1.13	45TD24

continued

© 2014, AFL, all rights reserved. PP-3-00663, Revision 4, 5.24.2021
Specifications are subject to change without notice.

TYPE SW2CT-AA
Swage Two Offset Cable Terminal

Ordering Information

AFL NO.	CABLE SIZE		PAD DETAIL	DIMENSIONS IN INCHES								DIE SIZE
	AAC	ACSR		A	B	C	D	E	F	G	H	
SW2CT2860-4N-AA	600	477 (30/7), 556.5 (18/1)	1	1.75	3.00	0.63	3.75	9.25	3.25	0.63	0.63	45TD28
SW2CT2860-4N4-AA			1	1.75	4.00	0.63	3.75	11.25	4.25	1.13	1.13	45TD28
SW2CT2860-5N4-AA			2	1.75	5.00	0.63	3.75	11.25	4.25	0.75	1.13	45TD28
SW2CT2860-6N4-AA			2	1.75	6.00	0.63	3.75	10.25	4.25	1.25	1.13	45TD28
SW2CT2863-4N-AA	636	556.5 (24/7), 556.5 (26/7)	1	1.75	3.00	0.63	3.75	9.25	3.25	0.63	0.63	45TD28
SW2CT2863-4N4-AA			1	1.75	4.00	0.63	3.75	11.25	4.25	1.13	1.13	45TD28
SW2CT2863-5N4-AA			2	1.75	5.00	0.63	3.75	11.25	4.25	0.75	1.13	45TD28
SW2CT2863-6N4-AA			2	1.75	6.00	0.63	3.75	10.25	4.25	1.25	1.13	45TD28
SW2CT2871-4N-AA	700, 715.5	556.5 (30/7), 605 (24/7), 605 (26/7), 636 (18/1), 636 (36/1)	1	1.75	3.00	0.63	3.75	9.25	3.25	0.63	0.63	45TD28
SW2CT2871-4N4-AA			1	1.75	4.00	0.63	3.75	11.25	4.25	1.13	1.13	45TD28
SW2CT2871-5N4-AA			2	1.75	5.00	0.63	3.75	11.25	4.25	0.75	1.13	45TD28
SW2CT2871-6N4-AA			2	1.75	6.00	0.63	3.75	10.25	4.25	1.25	1.13	45TD28
SW2CT3075-4N-AA	750	605 (30/7), 605 (30/19), 636 (24/7), 636 (26/7)	1	1.88	3.00	0.63	3.88	9.25	3.25	0.63	0.63	45TD30
SW2CT3075-4N4-AA			1	1.88	4.00	0.63	3.88	11.25	4.25	1.13	1.13	45TD30
SW2CT3075-5N4-AA			2	1.88	5.00	0.63	3.88	11.25	4.25	0.75	1.13	45TD30
SW2CT3075-6N4-AA			2	1.88	6.00	0.63	3.88	10.25	4.25	1.25	1.13	45TD30
SW2CT3079-4N-AA	795	636 (30/7), 636 (30/19), 715.5 (24/7), 715.5 (54/7), 795 (36/1)	1	1.88	3.00	0.63	3.88	9.25	3.25	0.63	0.63	45TD30
SW2CT3079-4N4-AA			1	1.88	4.00	0.63	3.88	11.25	4.25	1.13	1.13	45TD30
SW2CT3079-5N4-AA			2	1.88	5.00	0.63	3.88	11.25	4.25	0.75	1.13	45TD30
SW2CT3079-6N4-AA			2	1.88	6.00	0.63	3.88	10.25	4.25	1.25	1.13	45TD30
SW2CT3087-4N-AA	874.5	715.5 (26/7), 715.5 (30/19), 795 (45/7)	1	1.88	3.00	0.63	3.88	9.25	3.25	0.63	0.63	45TD30
SW2CT3087-4N4-AA			1	1.88	4.00	0.63	3.88	11.25	4.25	1.13	1.13	45TD30
SW2CT3087-5N4-AA			2	1.88	5.00	0.63	3.88	11.25	4.25	0.75	1.13	45TD30
SW2CT3087-6N4-AA			2	1.88	6.00	0.63	3.88	10.25	4.25	1.25	1.13	45TD30
SW2CT3290-4N-AA	900	795 (24/7), 795 (54/7), 795 (26/7)	1	2.00	3.00	0.63	3.88	9.37	3.25	0.63	0.63	45TD32
SW2CT3290-4N4-AA			1	2.00	4.00	0.63	3.88	11.38	4.25	1.13	1.13	45TD32
SW2CT3290-5N4-AA			2	2.00	5.00	0.63	3.88	11.38	4.25	0.75	1.13	45TD32
SW2CT3290-6N4-AA			2	2.00	6.00	0.63	3.88	10.38	4.25	1.25	1.13	45TD32
SW2CT3295-4N-AA	954	795 (30/19), 900 (45/7)	1	2.00	3.00	0.63	3.88	9.38	3.25	0.63	0.63	45TD32
SW2CT3295-4N4-AA			1	2.00	4.00	0.63	3.88	11.38	4.25	1.13	1.13	45TD32
SW2CT3295-5N4-AA			2	2.00	5.00	0.63	3.88	11.38	4.25	0.75	1.13	45TD32
SW2CT3295-6N4-AA			2	2.00	6.00	0.63	3.88	10.38	4.25	1.25	1.13	45TD32
SW2CT32100-4N-AA	1000	874.5 (54/7), 900 (54/7), 954 (45/7)	1	2.00	3.00	0.63	3.88	9.38	3.25	0.63	0.63	45TD32
SW2CT32100-4N4-AA			1	2.00	4.00	0.63	3.88	11.38	4.25	1.13	1.13	45TD32
SW2CT32100-5N4-AA			2	2.00	5.00	0.63	3.88	11.38	4.25	0.75	1.13	45TD32
SW2CT32100-6N4-AA			2	2.00	6.00	0.63	3.88	10.38	4.25	1.25	1.13	45TD32
SW2CT32103-4N-AA	1033.5	954 (54/7)	1	2.00	3.00	0.63	3.88	9.38	3.25	0.63	0.63	45TD32
SW2CT32103-4N4-AA			1	2.00	4.00	0.63	3.88	11.38	4.25	1.13	1.13	45TD32
SW2CT32103-5N4-AA			2	2.00	5.00	0.63	3.88	11.38	4.25	0.75	1.13	45TD32
SW2CT32103-6N4-AA			2	2.00	6.00	0.63	3.88	10.38	4.25	1.25	1.13	45TD32
SW2CT32111-4N-AA	1113	1033.5 (45/7), 1033.5 (54/7)	1	2.00	3.00	0.63	3.88	9.38	3.25	0.63	0.63	45TD32
SW2CT32111-4N4-AA			1	2.00	4.00	0.63	3.88	11.38	4.25	1.13	1.13	45TD32
SW2CT32111-5N4-AA			2	2.00	5.00	0.63	3.88	11.38	4.25	0.75	1.13	45TD32
SW2CT32111-6N4-AA			2	2.00	6.00	0.63	3.88	10.38	4.25	1.25	1.13	45TD32

continued

© 2014, AFL, all rights reserved. PP-3-00663, Revision 4, 5.24.2021
Specifications are subject to change without notice.

TYPE SW2CT-AA
Swage Two Offset Cable Terminal

Ordering Information

AFL NO.	CABLE SIZE		PAD	DIMENSIONS IN INCHES								DIE SIZE
	AAC	ACSR	DETAIL	A	B	C	D	E	F	G	H	
SW2CT36119-4N-AA	1192.5	1113 (45/7)	1	2.25	3.00	0.75	4.00	9.75	3.25	0.63	0.63	45TD36
SW2CT36119-4N4-AA			1	2.25	4.00	0.75	4.00	11.75	4.25	1.13	1.13	45TD36
SW2CT36119-5N4-AA			2	2.25	5.00	0.75	4.00	11.75	4.25	0.75	1.13	45TD36
SW2CT36119-6N4-AA			2	2.25	6.00	0.75	4.00	11.75	4.25	1.25	1.13	45TD36
SW2CT36127-4N-AA	1272	1113 (54/19), 1192.5 (45/7)	1	2.25	3.00	0.75	4.00	9.75	3.25	0.63	0.63	45TD36
SW2CT36127-4N4-AA			1	2.25	4.00	0.75	4.00	11.75	4.25	1.13	1.13	45TD36
SW2CT36127-5N4-AA			2	2.25	5.00	0.75	4.00	11.75	4.25	0.75	1.13	45TD36
SW2CT36127-6N4-AA			2	2.25	6.00	0.75	4.00	11.75	4.25	1.25	1.13	45TD36
SW2CT36135-4N-AA	1351.5	1192.5 (54/19), 1272 (45/7)	1	2.25	3.00	0.75	4.00	9.75	3.25	0.63	0.63	45TD36
SW2CT36135-4N4-AA			1	2.25	4.00	0.75	4.00	11.75	4.25	1.13	1.13	45TD36
SW2CT36135-5N4-AA			2	2.25	5.00	0.75	4.00	11.75	4.25	0.75	1.13	45TD36
SW2CT36135-6N4-AA			2	2.25	6.00	0.75	4.00	11.75	4.25	1.25	1.13	45TD36
SW2CT36143-4N-AA	1431	1272 (54/19), 1351.5 (45/7)	1	2.25	3.00	0.75	4.00	9.75	3.25	0.63	0.63	45TD36
SW2CT36143-4N4-AA			1	2.25	4.00	0.75	4.00	11.75	4.25	1.13	1.13	45TD36
SW2CT36143-5N4-AA			2	2.25	5.00	0.75	4.00	11.75	4.25	0.75	1.13	45TD36
SW2CT36143-6N4-AA			2	2.25	6.00	0.75	4.00	11.75	4.25	1.25	1.13	45TD36
SW2CT36151-4N-AA	1510.5	1351.5 (54/19), 1431 (45/7)	1	2.25	3.00	0.75	4.00	9.75	3.25	0.63	0.63	45TD36
SW2CT36151-4N4-AA			1	2.25	4.00	0.75	4.00	11.75	4.25	1.13	1.13	45TD36
SW2CT36151-5N4-AA			2	2.25	5.00	0.75	4.00	11.75	4.25	0.75	1.13	45TD36
SW2CT36151-6N4-AA			2	2.25	6.00	0.75	4.00	11.75	4.25	1.25	1.13	45TD36
SW2CT36159-4N-AA	1590	1431 (54/19), 1510.5 (45/7)	1	2.25	3.00	0.75	4.00	9.75	3.25	0.63	0.63	45TD36
SW2CT36159-4N4-AA			1	2.25	4.00	0.75	4.00	11.75	4.25	1.13	1.13	45TD36
SW2CT36159-5N4-AA			2	2.25	5.00	0.75	4.00	11.75	4.25	0.75	1.13	45TD36
SW2CT36159-6N4-AA			2	2.25	6.00	0.75	4.00	11.75	4.25	1.25	1.13	45TD36
SW2CT36175-4N-AA	1750	1510.5 (54/19), 1590 (45/7)	1	2.25	3.00	0.75	4.00	9.75	3.25	0.63	0.63	45TD36
SW2CT36175-4N4-AA			1	2.25	4.00	0.75	4.00	11.75	4.25	1.13	1.13	45TD36
SW2CT36175-5N4-AA			2	2.25	5.00	0.75	4.00	11.75	4.25	0.75	1.13	45TD36
SW2CT36175-6N4-AA			2	2.25	6.00	0.75	4.00	11.75	4.25	1.25	1.13	45TD36
SW2CT36180-4N-AA	1800	1590 (54/19)	1	2.25	3.00	0.75	4.00	9.75	3.25	0.63	0.63	45TD36
SW2CT36180-4N4-AA			1	2.25	4.00	0.75	4.00	11.75	4.25	1.13	1.13	45TD36
SW2CT36180-5N4-AA			2	2.25	5.00	0.75	4.00	11.75	4.25	0.75	1.13	45TD36
SW2CT36180-6N4-AA			2	2.25	6.00	0.75	4.00	11.75	4.25	1.25	1.13	45TD36
SW2CT44200-4N-AA	2000	1780 (84/19)	1	2.75	3.00	1.00	5.50	12.38	3.25	0.63	0.63	65TD44
SW2CT44200-4N4-AA			1	2.75	4.00	1.00	5.50	12.38	4.25	1.13	1.13	65TD44
SW2CT44200-5N4-AA			2	2.75	5.00	1.00	5.50	12.38	4.25	0.75	1.13	65TD44
SW2CT44200-6N4-AA			2	2.75	6.00	1.00	5.50	12.38	4.25	1.25	1.13	65TD44
SW2CT44230-4N-AA	2250	2156 (84/19), 2167 (72/7)	1	2.75	3.00	1.00	5.50	12.38	3.25	0.63	0.63	65TD44
SW2CT44230-4N4-AA			1	2.75	4.00	1.00	5.50	12.38	4.25	1.13	1.13	65TD44
SW2CT44230-5N4-AA			2	2.75	5.00	1.00	5.50	12.38	4.25	0.75	1.13	65TD44
SW2CT44230-6N4-AA			2	2.75	6.00	1.00	5.50	12.38	4.25	1.25	1.13	65TD44
SW2CT44250-4N-AA	2500	2312 (76/19)	1	2.75	3.00	1.00	5.50	12.38	3.25	0.63	0.63	65TD44
SW2CT44250-4N4-AA			1	2.75	4.00	1.00	5.50	12.38	4.25	1.13	1.13	65TD44
SW2CT44250-5N4-AA			2	2.75	5.00	1.00	5.50	12.38	4.25	0.75	1.13	65TD44
SW2CT44250-6N4-AA			2	2.75	6.00	1.00	5.50	12.38	4.25	1.25	1.13	65TD44

© 2014, AFL, all rights reserved. PP-3-00663, Revision 4, 5.24.2021
Specifications are subject to change without notice.

TYPE SW2CTA-30-AA

Swage Two Cable 30-Degree Terminal

A swage type two cable angled terminals on a nema pad.

Material

Aluminum Alloy

Notes

- Prefilled with AFL Filler Compound (AFC) and capped.
- For Electro Tin plate add "-SN" to AFL No.
  EX: SW2CTA2026-4N-30-AA-SN
- For 5 inch, 8 inch or 18 inch cable spacing add "-XX" to AFL No.
  EX: SW2CTA2026-18-4N-30-AA

ƒ —Machine Finish

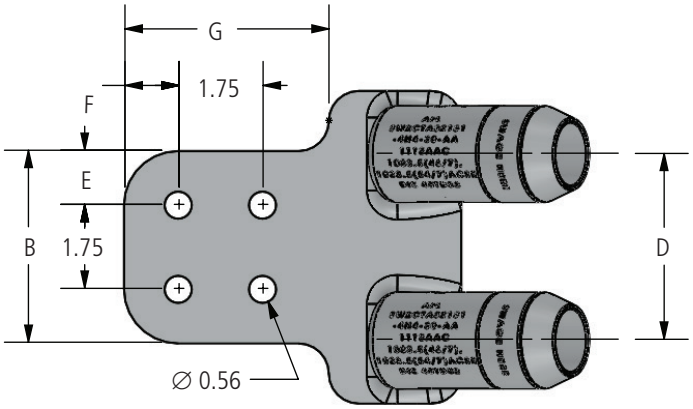

Pad Detail 1

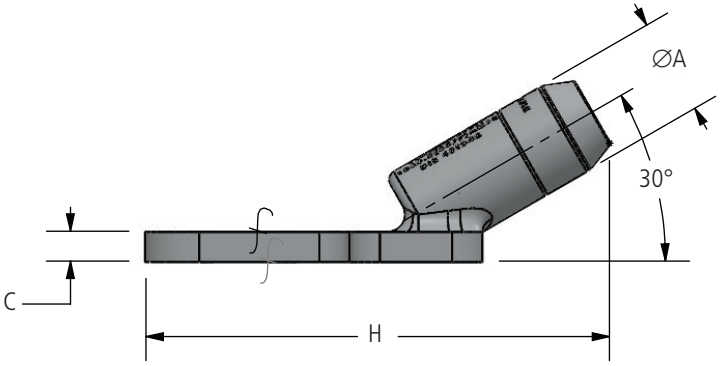

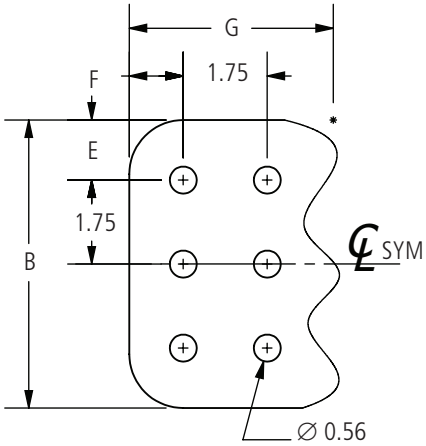

Pad Detail 2

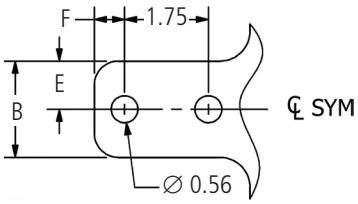

Pad Detail 3

continued

© 2014, AFL, all rights reserved. PP-3-00650, Revision 4, 5.17.2021
Specifications are subject to change without notice.

TYPE SW2CTA-30-AA

Swage Two Cable 30-Degree Terminal

Ordering Information

AFL NO.	CABLE SIZE		PAD	DIMENSIONS IN INCHES								DIE	VOLTAGE
	AAC	ACSR	DETAIL	A	B	C	D	E	F	G	H	SIZE	RATING
SW2CTA1613-4N-30-AA	2/0	1/0 (6/1)	1	1.00	3.00	0.50	2.75	0.63	0.63	3.25	7.25	45TD16	230 kV
SW2CTA1613-4N4-30-AA			1	1.00	4.00	0.50	2.75	1.13	1.13	4.25	8.25	45TD16	230 kV
SW2CTA1613-5N4-30-AA			2	1.00	5.00	0.50	2.75	0.75	1.13	4.25	8.25	45TD16	230 kV
SW2CTA1613-6N4-30-AA			2	1.00	6.00	0.50	2.75	1.25	1.13	4.25	8.25	45TD16	230 kV
SW2CTA1617-4N-30-AA	3/0	2/0 (6/1)	1	1.00	3.00	0.50	2.75	0.63	0.63	3.25	7.25	45TD16	230 kV
SW2CTA1617-4N4-30-AA			1	1.00	4.00	0.50	2.75	1.13	1.13	4.25	8.25	45TD16	230 kV
SW2CTA1617-5N4-30-AA			2	1.00	5.00	0.50	2.75	0.75	1.13	4.25	8.25	45TD16	230 kV
SW2CTA1617-6N4-30-AA			2	1.00	6.00	0.50	2.75	1.25	1.13	4.25	8.25	45TD16	230 kV
SW2CTA1621-4N-30-AA	4/0	3/0 (6/1)	1	1.00	3.00	0.50	2.75	0.63	0.63	3.25	7.25	45TD16	230 kV
SW2CTA1621-4N4-30-AA			1	1.00	4.00	0.50	2.75	1.13	1.13	4.25	8.25	45TD16	230 kV
SW2CTA1621-5N4-30-AA			2	1.00	5.00	0.50	2.75	0.75	1.13	4.25	8.25	45TD16	230 kV
SW2CTA1621-6N4-30-AA			2	1.00	6.00	0.50	2.75	1.25	1.13	4.25	8.25	45TD16	230 kV
SW2CTA1625-4N-30-AA	250	4/0 (6/1)	1	1.00	3.00	0.50	2.75	0.63	0.63	3.25	7.25	45TD16	230 kV
SW2CTA1625-4N4-30-AA			1	1.00	4.00	0.50	2.75	1.13	1.13	4.25	8.25	45TD16	230 kV
SW2CTA1625-5N4-30-AA			2	1.00	5.00	0.50	2.75	0.75	1.13	4.25	8.25	45TD16	230 kV
SW2CTA1625-6N4-30-AA			2	1.00	6.00	0.50	2.75	1.25	1.13	4.25	8.25	45TD16	230 kV
SW2CTA2026-4N-30-AA	266.8	266.8 (18/1)	1	1.25	3.00	0.50	2.75	0.63	0.63	3.25	7.53	45TD20	345 kV
SW2CTA2026-4N4-30-AA			1	1.25	4.00	0.50	2.75	1.13	1.13	4.25	8.53	45TD20	345 kV
SW2CTA2026-5N4-30-AA			2	1.25	5.00	0.50	2.75	0.75	1.13	4.25	8.54	45TD20	345 kV
SW2CTA2026-6N4-30-AA			2	1.25	6.00	0.50	2.75	1.25	1.13	4.25	8.54	45TD20	345 kV
SW2CTA2030-4N-30-AA	300	266.8 (26/7)	1	1.25	3.00	0.50	2.75	0.63	0.63	3.25	7.53	45TD20	345 kV
SW2CTA2030-4N4-30-AA			1	1.25	4.00	0.50	2.75	1.13	1.13	4.25	8.53	45TD20	345 kV
SW2CTA2030-5N4-30-AA			2	1.25	5.00	0.50	2.75	0.75	1.13	4.25	8.54	45TD20	345 kV
SW2CTA2030-6N4-30-AA			2	1.25	6.00	0.50	2.75	1.25	1.13	4.25	8.54	45TD20	345 kV
SW2CTA2035-4N-30-AA	336.4, 350	300 (26/7), 336.4 (18/1)	1	1.25	3.00	0.50	2.75	0.63	0.63	3.25	7.53	45TD20	345 kV
SW2CTA2035-4N4-30-AA			1	1.25	4.00	0.50	2.75	1.13	1.13	4.25	8.53	45TD20	345 kV
SW2CTA2035-5N4-30-AA			2	1.25	5.00	0.50	2.75	0.75	1.13	4.25	8.54	45TD20	345 kV
SW2CTA2035-6N4-30-AA			2	1.25	6.00	0.50	2.75	1.25	1.13	4.25	8.54	45TD20	345 kV
SW2CTA2039-4N-30-AA	397.5	336.4 (26/7), 336.4 (30/7), 397.5 (18/1)	1	1.25	3.00	0.50	2.75	0.63	0.63	3.25	7.53	45TD20	345 kV
SW2CTA2039-4N4-30-AA			1	1.25	4.00	0.50	2.75	1.13	1.13	4.25	8.53	45TD20	345 kV
SW2CTA2039-5N4-30-AA			2	1.25	5.00	0.50	2.75	0.75	1.13	4.25	8.54	45TD20	345 kV
SW2CTA2039-6N4-30-AA			2	1.25	6.00	0.50	2.75	1.25	1.13	4.25	8.54	45TD20	345 kV
SW2CTA2445-2N-30-AA	450	397.5 (24/7), 397.5 (26/7)	3	1.50	2.00	0.50	3.88	1.00	0.63	3.25	7.24	45TD24	230 kV
SW2CTA2445-4N-30-AA			1	1.50	3.00	0.50	3.63	0.63	0.63	3.25	7.61	45TD24	345 kV
SW2CTA2445-4N4-30-AA			1	1.50	4.00	0.50	3.63	1.13	1.13	4.25	8.61	45TD24	345 kV
SW2CTA2445-5N4-30-AA			2	1.50	5.00	0.50	3.63	0.75	1.13	4.25	8.61	45TD24	345 kV
SW2CTA2445-6N4-30-AA			2	1.50	6.00	0.50	3.63	1.25	1.13	4.25	9.61	45TD24	345 kV
SW2CTA2447-4N-30-AA	477	397.5 (30/7)	1	1.50	3.00	0.50	3.63	0.63	0.63	3.25	7.61	45TD24	345 kV
SW2CTA2447-4N4-30-AA			1	1.50	4.00	0.50	3.63	1.13	1.13	4.25	8.61	45TD24	345 kV
SW2CTA2447-5N4-30-AA			2	1.50	5.00	0.50	3.63	0.75	1.13	4.25	8.61	45TD24	345 kV
SW2CTA2447-6N4-30-AA			2	1.50	6.00	0.50	3.63	1.25	1.13	4.25	9.61	45TD24	345 kV
SW2CTA2450-4N-30-AA	500	477 (18/1)	1	1.50	3.00	0.50	3.63	0.63	0.63	3.25	7.61	45TD24	345 kV
SW2CTA2450-4N4-30-AA			1	1.50	4.00	0.50	3.63	1.13	1.13	4.25	8.61	45TD24	345 kV
SW2CTA2450-5N4-30-AA			2	1.50	5.00	0.50	3.63	0.75	1.13	4.25	8.61	45TD24	345 kV
SW2CTA2450-6N4-30-AA			2	1.50	6.00	0.50	3.63	1.25	1.13	4.25	9.61	45TD24	345 kV
SW2CTA2455-4N-30-AA	556.5	477 (24/7), 477 (26/7)	1	1.50	3.00	0.50	3.63	0.63	0.63	3.25	7.61	45TD24	345 kV
SW2CTA2455-4N4-30-AA			1	1.50	4.00	0.50	3.63	1.13	1.13	4.25	8.61	45TD24	345 kV
SW2CTA2455-5N4-30-AA			2	1.50	5.00	0.50	3.63	0.75	1.13	4.25	8.61	45TD24	345 kV
SW2CTA2455-6N4-30-AA			2	1.50	6.00	0.50	3.63	1.25	1.13	4.25	9.61	45TD24	345 kV

continued

© 2014, AFL, all rights reserved. PP-3-00650, Revision 4, 5.17.2021
Specifications are subject to change without notice.

TYPE SW2CTA-30-AA

Swage Two Cable 30-Degree Terminal

Ordering Information

AFL NO.	CABLE SIZE		PAD	DIMENSIONS IN INCHES								DIE	VOLTAGE
	AAC	ACSR	DETAIL	A	B	C	D	E	F	G	H	SIZE	RATING
SW2CTA2860-4N-30-AA	600	477 (30/7), 556.5 (18/1)	1	1.75	3.00	0.63	3.75	0.63	0.63	3.25	8.67	45TD28	345 kV
SW2CTA2860-4N4-30-AA			1	1.75	4.00	0.63	3.75	1.13	1.13	4.25	10.67	45TD28	345 kV
SW2CTA2860-5N4-30-AA			2	1.75	5.00	0.63	3.75	0.75	1.13	4.25	10.67	45TD28	345 kV
SW2CTA2860-6N4-30-AA			2	1.75	6.00	0.63	3.75	1.25	1.13	4.25	9.67	45TD28	345 kV
SW2CTA2863-4N-30-AA	636	556.5 (24/7), 556.5 (26/7)	1	1.75	3.00	0.63	3.75	0.63	0.63	3.25	8.67	45TD28	345 kV
SW2CTA2863-4N4-30-AA			1	1.75	4.00	0.63	3.75	1.13	1.13	4.25	10.67	45TD28	345 kV
SW2CTA2863-5N4-30-AA			2	1.75	5.00	0.63	3.75	0.75	1.13	4.25	10.67	45TD28	345 kV
SW2CTA2863-6N4-30-AA			2	1.75	6.00	0.63	3.75	1.25	1.13	4.25	9.67	45TD28	345 kV
SW2CTA2871-4N-30-AA	700, 715.5	556.5 (30/7), 605 (24/7), 605 (26/7), 636 (18/1), 636 (36/1)	1	1.75	3.00	0.63	3.75	0.63	0.63	3.25	8.67	45TD28	345 kV
SW2CTA2871-4N4-30-AA			1	1.75	4.00	0.63	3.75	1.13	1.13	4.25	10.67	45TD28	345 kV
SW2CTA2871-5N4-30-AA			2	1.75	5.00	0.63	3.75	0.75	1.13	4.25	10.67	45TD28	345 kV
SW2CTA2871-6N4-30-AA			2	1.75	6.00	0.63	3.75	1.25	1.13	4.25	9.67	45TD28	345 kV
SW2CTA3075-4N-30-AA	750	605 (30/7), 605 (30/19), 636 (24/7), 636 (26/7)	1	1.88	3.00	0.63	3.88	0.63	0.63	3.25	8.61	45TD30	345 kV
SW2CTA3075-4N4-30-AA			1	1.88	4.00	0.63	3.88	1.13	1.13	4.25	10.61	45TD30	345 kV
SW2CTA3075-5N4-30-AA			2	1.88	5.00	0.63	3.88	0.75	1.13	4.25	10.61	45TD30	345 kV
SW2CTA3075-6N4-30-AA			2	1.88	6.00	0.63	3.88	1.25	1.13	4.25	9.61	45TD30	345 kV
SW2CTA3079-4N-30-AA	795	636 (30/7), 636 (30/19), 715.5 (24/7), 715.5 (54/7), 795 (36/1)	1	1.88	3.00	0.63	3.88	0.63	0.63	3.25	8.61	45TD30	345 kV
SW2CTA3079-4N4-30-AA			1	1.88	4.00	0.63	3.88	1.13	1.13	4.25	10.61	45TD30	345 kV
SW2CTA3079-5N4-30-AA			2	1.88	5.00	0.63	3.88	0.75	1.13	4.25	10.61	45TD30	345 kV
SW2CTA3079-6N4-30-AA			2	1.88	6.00	0.63	3.88	1.25	1.13	4.25	9.61	45TD30	345 kV
SW2CTA3087-4N-30-AA	874.5	715.5 (26/7), 715.5 (30/19), 795 (45/7)	1	1.88	3.00	0.63	3.88	0.63	0.63	3.25	8.61	45TD30	345 kV
SW2CTA3087-4N4-30-AA			1	1.88	4.00	0.63	3.88	1.13	1.13	4.25	10.61	45TD30	345 kV
SW2CTA3087-5N4-30-AA			2	1.88	5.00	0.63	3.88	0.75	1.13	4.25	10.61	45TD30	345 kV
SW2CTA3087-6N4-30-AA			2	1.88	6.00	0.63	3.88	1.25	1.13	4.25	9.61	45TD30	345 kV
SW2CTA3290-4N-30-AA	900	795 (24/7), 795 (54/7), 795 (26/7)	1	2.00	3.00	0.63	3.88	0.63	0.63	3.25	8.66	45TD32	345 kV
SW2CTA3290-4N4-30-AA			1	2.00	4.00	0.63	3.88	1.13	1.13	4.25	10.66	45TD32	345 kV
SW2CTA3290-5N4-30-AA			2	2.00	5.00	0.63	3.88	0.75	1.13	4.25	10.66	45TD32	345 kV
SW2CTA3290-6N4-30-AA			2	2.00	6.00	0.63	3.88	1.25	1.13	4.25	9.66	45TD32	345 kV
SW2CTA3295-4N-30-AA	954	795 (30/19), 900 (45/7)	1	2.00	3.00	0.63	3.88	0.63	0.63	3.25	8.66	45TD32	345 kV
SW2CTA3295-4N4-30-AA			1	2.00	4.00	0.63	3.88	1.13	1.13	4.25	10.66	45TD32	345 kV
SW2CTA3295-5N4-30-AA			2	2.00	5.00	0.63	3.88	0.75	1.13	4.25	10.66	45TD32	345 kV
SW2CTA3295-6N4-30-AA			2	2.00	6.00	0.63	3.88	1.25	1.13	4.25	9.66	45TD32	345 kV
SW2CTA32100-4N-30-AA	1000	874.5 (54/7), 900 (54/7), 954 (45/7)	1	2.00	3.00	0.63	3.88	0.63	0.63	3.25	8.66	45TD32	345 kV
SW2CTA32100-4N4-30-AA			1	2.00	4.00	0.63	3.88	1.13	1.13	4.25	10.66	45TD32	345 kV
SW2CTA32100-5N4-30-AA			2	2.00	5.00	0.63	3.88	0.75	1.13	4.25	10.66	45TD32	345 kV
SW2CTA32100-6N4-30-AA			2	2.00	6.00	0.63	3.88	1.25	1.13	4.25	9.66	45TD32	345 kV
SW2CTA32103-4N-30-AA	1033.5	954 (54/7)	1	2.00	3.00	0.63	3.88	0.63	0.63	3.25	8.66	45TD32	345 kV
SW2CTA32103-4N4-30-AA			1	2.00	4.00	0.63	3.88	1.13	1.13	4.25	10.66	45TD32	345 kV
SW2CTA32103-5N4-30-AA			2	2.00	5.00	0.63	3.88	0.75	1.13	4.25	10.66	45TD32	345 kV
SW2CTA32103-6N4-30-AA			2	2.00	6.00	0.63	3.88	1.25	1.13	4.25	9.66	45TD32	345 kV
SW2CTA32111-4N-30-AA	1113	1033.5 (45/7), 1033.5 (54/7)	1	2.00	3.00	0.63	3.88	0.63	0.63	3.25	8.66	45TD32	345 kV
SW2CTA32111-4N4-30-AA			1	2.00	4.00	0.63	3.88	1.13	1.13	4.25	10.66	45TD32	345 kV
SW2CTA32111-5N4-30-AA			2	2.00	5.00	0.63	3.88	0.75	1.13	4.25	10.66	45TD32	345 kV
SW2CTA32111-6N4-30-AA			2	2.00	6.00	0.63	3.88	1.25	1.13	4.25	9.66	45TD32	345 kV

continued

© 2014, AFL, all rights reserved. PP-3-00650, Revision 4, 5.17.2021
Specifications are subject to change without notice.

TYPE SW2CTA-30-AA

Swage Two Cable 30-Degree Terminal

Ordering Information

AFL NO.	CABLE SIZE		PAD	DIMENSIONS IN INCHES								DIE	VOLTAGE
	AAC	ACSR	DETAIL	A	B	C	D	E	F	G	H	SIZE	RATING
SW2CTA36119-4N-30-AA	1192.5	1113 (45/7)	1	2.25	3.00	0.75	4.00	0.63	0.63	3.25	8.86	45TD36	345 kV
SW2CTA36119-4N4-30-AA			1	2.25	4.00	0.75	4.00	1.13	1.13	4.25	10.86	45TD36	345 kV
SW2CTA36119-5N4-30-AA			2	2.25	5.00	0.75	4.00	0.75	1.13	4.25	10.86	45TD36	345 kV
SW2CTA36119-6N4-30-AA			2	2.25	6.00	0.75	4.00	1.25	1.13	4.25	10.86	45TD36	345 kV
SW2CTA36127-4N-30-AA	1272	1113 (54/19), 1192.5 (45/7)	1	2.25	3.00	0.75	4.00	0.63	0.63	3.25	8.86	45TD36	345 kV
SW2CTA36127-4N4-30-AA			1	2.25	4.00	0.75	4.00	1.13	1.13	4.25	10.86	45TD36	345 kV
SW2CTA36127-5N4-30-AA			2	2.25	5.00	0.75	4.00	0.75	1.13	4.25	10.86	45TD36	345 kV
SW2CTA36127-6N4-30-AA			2	2.25	6.00	0.75	4.00	1.25	1.13	4.25	10.86	45TD36	345 kV
SW2CTA36135-4N-30-AA	1351.5	1192.5 (54/19), 1272 (45/7)	1	2.25	3.00	0.75	4.00	0.63	0.63	3.25	8.86	45TD36	345 kV
SW2CTA36135-4N4-30-AA			1	2.25	4.00	0.75	4.00	1.13	1.13	4.25	10.86	45TD36	345 kV
SW2CTA36135-5N4-30-AA			2	2.25	5.00	0.75	4.00	0.75	1.13	4.25	10.86	45TD36	345 kV
SW2CTA36135-6N4-30-AA			2	2.25	6.00	0.75	4.00	1.25	1.13	4.25	10.86	45TD36	345 kV
SW2CTA36143-4N-30-AA	1431	1272 (54/19), 1351.5 (45/7)	1	2.25	3.00	0.75	4.00	0.63	0.63	3.25	8.86	45TD36	345 kV
SW2CTA36143-4N4-30-AA			1	2.25	4.00	0.75	4.00	1.13	1.13	4.25	10.86	45TD36	345 kV
SW2CTA36143-5N4-30-AA			2	2.25	5.00	0.75	4.00	0.75	1.13	4.25	10.86	45TD36	345 kV
SW2CTA36143-6N4-30-AA			2	2.25	6.00	0.75	4.00	1.25	1.13	4.25	10.86	45TD36	345 kV
SW2CTA36151-4N-30-AA	1510.5	1351.5 (54/19), 1431 (45/7)	1	2.25	3.00	0.75	4.00	0.63	0.63	3.25	8.86	45TD36	345 kV
SW2CTA36151-4N4-30-AA			1	2.25	4.00	0.75	4.00	1.13	1.13	4.25	10.86	45TD36	345 kV
SW2CTA36151-5N4-30-AA			2	2.25	5.00	0.75	4.00	0.75	1.13	4.25	10.86	45TD36	345 kV
SW2CTA36151-6N4-30-AA			2	2.25	6.00	0.75	4.00	1.25	1.13	4.25	10.86	45TD36	345 kV
SW2CTA36159-4N-30-AA	1590	1431 (54/19), 1510.5 (45/7)	1	2.25	3.00	0.75	4.00	0.63	0.63	3.25	8.86	45TD36	345 kV
SW2CTA36159-4N4-30-AA			1	2.25	4.00	0.75	4.00	1.13	1.13	4.25	10.86	45TD36	345 kV
SW2CTA36159-5N4-30-AA			2	2.25	5.00	0.75	4.00	0.75	1.13	4.25	10.86	45TD36	345 kV
SW2CTA36159-6N4-30-AA			2	2.25	6.00	0.75	4.00	1.25	1.13	4.25	10.86	45TD36	345 kV
SW2CTA36175-4N-30-AA	1750	1510.5 (54/19), 1590 (45/7)	1	2.25	3.00	0.75	4.00	0.63	0.63	3.25	8.86	45TD36	345 kV
SW2CTA36175-4N4-30-AA			1	2.25	4.00	0.75	4.00	1.13	1.13	4.25	10.86	45TD36	345 kV
SW2CTA36175-5N4-30-AA			2	2.25	5.00	0.75	4.00	0.75	1.13	4.25	10.86	45TD36	345 kV
SW2CTA36175-6N4-30-AA			2	2.25	6.00	0.75	4.00	1.25	1.13	4.25	10.86	45TD36	345 kV
SW2CTA36180-4N-30-AA	1800	1590 (54/19)	1	2.25	3.00	0.75	4.00	0.63	0.63	3.25	8.86	45TD36	345 kV
SW2CTA36180-4N4-30-AA			1	2.25	4.00	0.75	4.00	1.13	1.13	4.25	10.86	45TD36	345 kV
SW2CTA36180-5N4-30-AA			2	2.25	5.00	0.75	4.00	0.75	1.13	4.25	10.86	45TD36	345 kV
SW2CTA36180-6N4-30-AA			2	2.25	6.00	0.75	4.00	1.25	1.13	4.25	10.86	45TD36	345 kV
SW2CTA44200-4N-30-AA	2000	1780 (84/19)	1	2.75	3.00	1.00	5.50	0.63	0.63	3.25	11.12	65TD44	345 kV
SW2CTA44200-4N4-30-AA			1	2.75	4.00	1.00	5.50	1.13	1.13	4.25	11.12	65TD44	345 kV
SW2CTA44200-5N4-30-AA			2	2.75	5.00	1.00	5.50	0.75	1.13	4.25	11.12	65TD44	345 kV
SW2CTA44200-6N4-30-AA			2	2.75	6.00	1.00	5.50	1.25	1.13	4.25	11.12	65TD44	345 kV
SW2CTA44230-4N-30-AA	2250	2156 (84/19), 2167 (72/7)	1	2.75	3.00	1.00	5.50	0.63	0.63	3.25	11.12	65TD44	345 kV
SW2CTA44230-4N4-30-AA			1	2.75	4.00	1.00	5.50	1.13	1.13	4.25	11.12	65TD44	345 kV
SW2CTA44230-5N4-30-AA			2	2.75	5.00	1.00	5.50	0.75	1.13	4.25	11.12	65TD44	345 kV
SW2CTA44230-6N4-30-AA			2	2.75	6.00	1.00	5.50	1.25	1.13	4.25	11.12	65TD44	345 kV
SW2CTA44250-4N-30-AA	2500	2312 (76/19)	1	2.75	3.00	1.00	5.50	0.63	0.63	3.25	11.12	65TD44	345 kV
SW2CTA44250-4N4-30-AA			1	2.75	4.00	1.00	5.50	1.13	1.13	4.25	11.12	65TD44	345 kV
SW2CTA44250-5N4-30-AA			2	2.75	5.00	1.00	5.50	0.75	1.13	4.25	11.12	65TD44	345 kV
SW2CTA44250-6N4-30-AA			2	2.75	6.00	1.00	5.50	1.25	1.13	4.25	11.12	65TD44	345 kV

© 2014, AFL, all rights reserved. PP-3-00650, Revision 4, 5.17.2021
Specifications are subject to change without notice.

TYPE SW2CTA-45-AA

Swage Two Cable 45-Degree Terminal

A swage type two cable angled terminals on a nema pad.

Material

Aluminum Alloy

Notes

- Prefilled with AFL Filler Compound (AFC) and capped.
- For Electro Tin plate add "-SN" to AFL No.
  EX: SW2CTA2026-4N-45-AA-SN
- For 5 inch, 8 inch or 18 inch cable spacing add "-XX" to AFL No.
  EX: SW2CTA2026-18-4N-45-AA

ƒ —Machine Finish

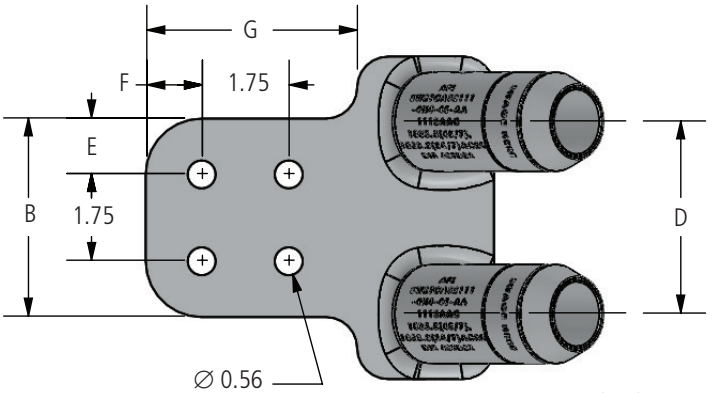

Pad Detail 1

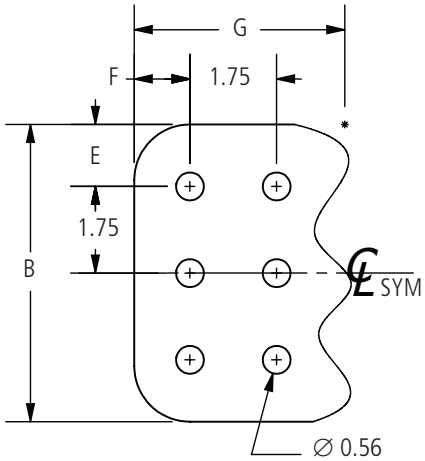

Pad Detail 2

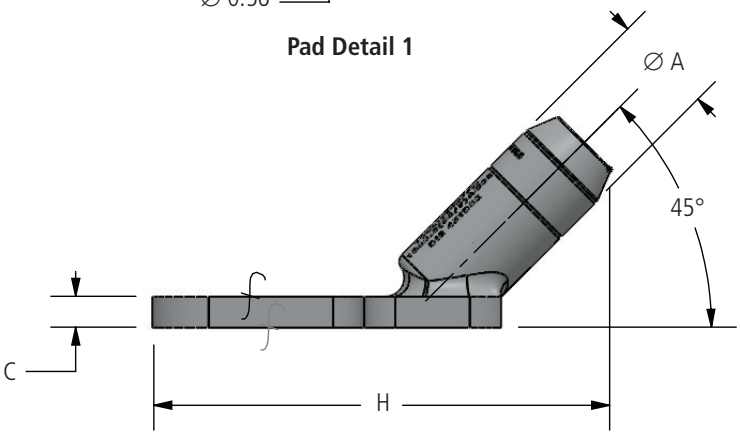

continued

© 2014, AFL, all rights reserved. PP-3-00651, Revision 4, 5.24.2021
Specifications are subject to change without notice.

TYPE SW2CTA-45-AA
Swage Two Cable 45-Degree Terminal

Ordering Information

AFL NO.	CABLE SIZE		PAD	DIMENSIONS IN INCHES								DIE
	AAC	ACSR	DETAIL	A	B	C	D	E	F	G	H	SIZE
SW2CTA1613-4N-45-AA	2/0	1/0 (6/1)	1	1.00	3.00	0.50	2.75	0.63	0.63	3.25	6.85	45TD16
SW2CTA1613-4N4-45-AA			1	1.00	4.00	0.50	2.75	1.13	1.13	4.25	7.79	45TD16
SW2CTA1613-5N4-45-AA			2	1.00	5.00	0.50	2.75	0.75	1.13	4.25	7.79	45TD16
SW2CTA1613-6N4-45-AA			2	1.00	6.00	0.50	2.75	1.25	1.13	4.25	7.79	45TD16
SW2CTA1617-4N-45-AA	3/0	2/0 (6/1)	1	1.00	3.00	0.50	2.75	0.63	0.63	3.25	6.85	45TD16
SW2CTA1617-4N4-45-AA			1	1.00	4.00	0.50	2.75	1.13	1.13	4.25	7.79	45TD16
SW2CTA1617-5N4-45-AA			2	1.00	5.00	0.50	2.75	0.75	1.13	4.25	7.79	45TD16
SW2CTA1617-6N4-45-AA			2	1.00	6.00	0.50	2.75	1.25	1.13	4.25	7.79	45TD16
SW2CTA1621-4N-45-AA	4/0	3/0 (6/1)	1	1.00	3.00	0.50	2.75	0.63	0.63	3.25	6.85	45TD16
SW2CTA1621-4N4-45-AA			1	1.00	4.00	0.50	2.75	1.13	1.13	4.25	7.79	45TD16
SW2CTA1621-5N4-45-AA			2	1.00	5.00	0.50	2.75	0.75	1.13	4.25	7.79	45TD16
SW2CTA1621-6N4-45-AA			2	1.00	6.00	0.50	2.75	1.25	1.13	4.25	7.79	45TD16
SW2CTA1625-4N-45-AA	250	4/0 (6/1)	1	1.00	3.00	0.50	2.75	0.63	0.63	3.25	6.85	45TD16
SW2CTA1625-4N4-45-AA			1	1.00	4.00	0.50	2.75	1.13	1.13	4.25	7.79	45TD16
SW2CTA1625-5N4-45-AA			2	1.00	5.00	0.50	2.75	0.75	1.13	4.25	7.79	45TD16
SW2CTA1625-6N4-45-AA			2	1.00	6.00	0.50	2.75	1.25	1.13	4.25	7.79	45TD16
SW2CTA2026-4N-45-AA	266.8	266.8 (18/1)	1	1.25	3.00	0.50	2.75	0.63	0.63	3.25	7.09	45TD20
SW2CTA2026-4N4-45-AA			1	1.25	4.00	0.50	2.75	1.13	1.13	4.25	8.03	45TD20
SW2CTA2026-5N4-45-AA			2	1.25	5.00	0.50	2.75	0.75	1.13	4.25	8.03	45TD20
SW2CTA2026-6N4-45-AA			2	1.25	6.00	0.50	2.75	1.25	1.13	4.25	8.03	45TD20
SW2CTA2030-4N-45-AA	300	266.8 (26/7)	1	1.25	3.00	0.50	2.75	0.63	0.63	3.25	7.09	45TD20
SW2CTA2030-4N4-45-AA			1	1.25	4.00	0.50	2.75	1.13	1.13	4.25	8.03	45TD20
SW2CTA2030-5N4-45-AA			2	1.25	5.00	0.50	2.75	0.75	1.13	4.25	8.03	45TD20
SW2CTA2030-6N4-45-AA			2	1.25	6.00	0.50	2.75	1.25	1.13	4.25	8.03	45TD20
SW2CTA2035-4N-45-AA	336.4, 350	300 (26/7), 336.4 (18/1)	1	1.25	3.00	0.50	2.75	0.63	0.63	3.25	7.09	45TD20
SW2CTA2035-4N4-45-AA			1	1.25	4.00	0.50	2.75	1.13	1.13	4.25	8.03	45TD20
SW2CTA2035-5N4-45-AA			2	1.25	5.00	0.50	2.75	0.75	1.13	4.25	8.03	45TD20
SW2CTA2035-6N4-45-AA			2	1.25	6.00	0.50	2.75	1.25	1.13	4.25	8.03	45TD20
SW2CTA2039-4N-45-AA	397.5	336.4 (26/7), 336.4 (30/7), 397.5 (18/1)	1	1.25	3.00	0.50	2.75	0.63	0.63	3.25	7.09	45TD20
SW2CTA2039-4N4-45-AA			1	1.25	4.00	0.50	2.75	1.13	1.13	4.25	8.03	45TD20
SW2CTA2039-5N4-45-AA			2	1.25	5.00	0.50	2.75	0.75	1.13	4.25	8.03	45TD20
SW2CTA2039-6N4-45-AA			2	1.25	6.00	0.50	2.75	1.25	1.13	4.25	8.03	45TD20
SW2CTA2445-4N-45-AA	450	397.5 (24/7), 397.5 (26/7)	1	1.50	3.00	0.50	3.63	0.63	0.63	3.25	7.15	45TD24
SW2CTA2445-4N4-45-AA			1	1.50	4.00	0.50	3.63	1.13	1.13	4.25	8.09	45TD24
SW2CTA2445-5N4-45-AA			2	1.50	5.00	0.50	3.63	0.75	1.13	4.25	8.09	45TD24
SW2CTA2445-6N4-45-AA			2	1.50	6.00	0.50	3.63	1.25	1.13	4.25	9.09	45TD24
SW2CTA2447-4N-45-AA	477	397.5 (30/7)	1	1.50	3.00	0.50	3.63	0.63	0.63	3.25	7.15	45TD24
SW2CTA2447-4N4-45-AA			1	1.50	4.00	0.50	3.63	1.13	1.13	4.25	8.09	45TD24
SW2CTA2447-5N4-45-AA			2	1.50	5.00	0.50	3.63	0.75	1.13	4.25	8.09	45TD24
SW2CTA2447-6N4-45-AA			2	1.50	6.00	0.50	3.63	1.25	1.13	4.25	9.09	45TD24
SW2CTA2450-4N-45-AA	500	477 (18/1)	1	1.50	3.00	0.50	3.63	0.63	0.63	3.25	7.15	45TD24
SW2CTA2450-4N4-45-AA			1	1.50	4.00	0.50	3.63	1.13	1.13	4.25	8.09	45TD24
SW2CTA2450-5N4-45-AA			2	1.50	5.00	0.50	3.63	0.75	1.13	4.25	8.09	45TD24
SW2CTA2450-6N4-45-AA			2	1.50	6.00	0.50	3.63	1.25	1.13	4.25	9.09	45TD24
SW2CTA2455-4N-45-AA	556.5	477 (24/7), 477 (26/7)	1	1.50	3.00	0.50	3.63	0.63	0.63	3.25	7.15	45TD24
SW2CTA2455-4N4-45-AA			1	1.50	4.00	0.50	3.63	1.13	1.13	4.25	8.09	45TD24
SW2CTA2455-5N4-45-AA			2	1.50	5.00	0.50	3.63	0.75	1.13	4.25	8.09	45TD24
SW2CTA2455-6N4-45-AA			2	1.50	6.00	0.50	3.63	1.25	1.13	4.25	9.09	45TD24

continued

© 2014, AFL, all rights reserved. PP-3-00651, Revision 4, 5.24.2021
Specifications are subject to change without notice.

TYPE SW2CTA-45-AA

Swage Two Cable 45-Degree Terminal

Ordering Information

AFL NO.	CABLE SIZE		PAD	DIMENSIONS IN INCHES								DIE
	AAC	ACSR	DETAIL	A	B	C	D	E	F	G	H	SIZE
SW2CTA2860-4N-45-AA	600	477 (30/7), 556.5 (18/1)	1	1.75	3.00	0.63	3.75	0.63	0.63	3.25	8.14	45TD28
SW2CTA2860-4N4-45-AA			1	1.75	4.00	0.63	3.75	1.13	1.13	4.25	10.14	45TD28
SW2CTA2860-5N4-45-AA			2	1.75	5.00	0.63	3.75	0.75	1.13	4.25	10.14	45TD28
SW2CTA2860-6N4-45-AA			2	1.75	6.00	0.63	3.75	1.25	1.13	4.25	9.20	45TD28
SW2CTA2863-4N-45-AA	636	556.5 (24/7), 556.5 (26/7)	1	1.75	3.00	0.63	3.75	0.63	0.63	3.25	8.20	45TD28
SW2CTA2863-4N4-45-AA			1	1.75	4.00	0.63	3.75	1.13	1.13	4.25	10.14	45TD28
SW2CTA2863-5N4-45-AA			2	1.75	5.00	0.63	3.75	0.75	1.13	4.25	10.14	45TD28
SW2CTA2863-6N4-45-AA			2	1.75	6.00	0.63	3.75	1.25	1.13	4.25	9.20	45TD28
SW2CTA2871-4N-45-AA	700, 715.5	556.5 (30/7), 605 (24/7), 605 (26/7), 636 (18/1), 636 (36/1)	1	1.75	3.00	0.63	3.75	0.63	0.63	3.25	8.20	45TD28
SW2CTA2871-4N4-45-AA			1	1.75	4.00	0.63	3.75	1.13	1.13	4.25	10.14	45TD28
SW2CTA2871-5N4-45-AA			2	1.75	5.00	0.63	3.75	0.75	1.13	4.25	10.14	45TD28
SW2CTA2871-6N4-45-AA			2	1.75	6.00	0.63	3.75	1.25	1.13	4.25	9.20	45TD28
SW2CTA3075-4N-45-AA	750	605 (30/7), 605 (30/19), 636 (24/7), 636 (26/7)	1	1.88	3.00	0.63	3.88	0.63	0.63	3.25	8.16	45TD30
SW2CTA3075-4N4-45-AA			1	1.88	4.00	0.63	3.88	1.13	1.13	4.25	10.10	45TD30
SW2CTA3075-5N4-45-AA			2	1.88	5.00	0.63	3.88	0.75	1.13	4.25	10.10	45TD30
SW2CTA3075-6N4-45-AA			2	1.88	6.00	0.63	3.88	1.25	1.13	4.25	9.16	45TD30
SW2CTA3079-4N-45-AA	795	636 (30/7), 636 (30/19), 715.5 (24/7), 715.5 (54/7), 795 (36/1)	1	1.88	3.00	0.63	3.88	0.63	0.63	3.25	8.16	45TD30
SW2CTA3079-4N4-45-AA			1	1.88	4.00	0.63	3.88	1.13	1.13	4.25	10.10	45TD30
SW2CTA3079-5N4-45-AA			2	1.88	5.00	0.63	3.88	0.75	1.13	4.25	10.10	45TD30
SW2CTA3079-6N4-45-AA			2	1.88	6.00	0.63	3.88	1.25	1.13	4.25	9.16	45TD30
SW2CTA3087-4N-45-AA	874.5	715.5 (26/7), 715.5 (30/19), 795 (45/7)	1	1.88	3.00	0.63	3.88	0.63	0.63	3.25	8.16	45TD30
SW2CTA3087-4N4-45-AA			1	1.88	4.00	0.63	3.88	1.13	1.13	4.25	10.10	45TD30
SW2CTA3087-5N4-45-AA			2	1.88	5.00	0.63	3.88	0.75	1.13	4.25	10.10	45TD30
SW2CTA3087-6N4-45-AA			2	1.88	6.00	0.63	3.88	1.25	1.13	4.25	9.16	45TD30
SW2CTA3290-4N-45-AA	900	795 (24/7), 795 (54/7), 795 (26/7)	1	2.00	3.00	0.63	3.88	0.63	0.63	3.25	8.20	45TD32
SW2CTA3290-4N4-45-AA			1	2.00	4.00	0.63	3.88	1.13	1.13	4.25	10.14	45TD32
SW2CTA3290-5N4-45-AA			2	2.00	5.00	0.63	3.88	0.75	1.13	4.25	10.14	45TD32
SW2CTA3290-6N4-45-AA			2	2.00	6.00	0.63	3.88	1.25	1.13	4.25	9.20	45TD32
SW2CTA3295-4N-45-AA	954	795 (30/19), 900 (45/7)	1	2.00	3.00	0.63	3.88	0.63	0.63	3.25	8.20	45TD32
SW2CTA3295-4N4-45-AA			1	2.00	4.00	0.63	3.88	1.13	1.13	4.25	10.14	45TD32
SW2CTA3295-5N4-45-AA			2	2.00	5.00	0.63	3.88	0.75	1.13	4.25	10.14	45TD32
SW2CTA3295-6N4-45-AA			2	2.00	6.00	0.63	3.88	1.25	1.13	4.25	9.20	45TD32
SW2CTA32100-4N-45-AA	1000	874.5 (54/7), 900 (54/7), 954 (45/7)	1	2.00	3.00	0.63	3.88	0.63	0.63	3.25	8.20	45TD32
SW2CTA32100-4N4-45-AA			1	2.00	4.00	0.63	3.88	1.13	1.13	4.25	10.14	45TD32
SW2CTA32100-5N4-45-AA			2	2.00	5.00	0.63	3.88	0.75	1.13	4.25	10.14	45TD32
SW2CTA32100-6N4-45-AA			2	2.00	6.00	0.63	3.88	1.25	1.13	4.25	9.20	45TD32
SW2CTA32103-4N-45-AA	1033.5	954 (54/7)	1	2.00	3.00	0.63	3.88	0.63	0.63	3.25	8.20	45TD32
SW2CTA32103-4N4-45-AA			1	2.00	4.00	0.63	3.88	1.13	1.13	4.25	10.14	45TD32
SW2CTA32103-5N4-45-AA			2	2.00	5.00	0.63	3.88	0.75	1.13	4.25	10.14	45TD32
SW2CTA32103-6N4-45-AA			2	2.00	6.00	0.63	3.88	1.25	1.13	4.25	9.20	45TD32
SW2CTA32111-4N-45-AA	1113	1033.5 (45/7), 1033.5 (54/7)	1	2.00	3.00	0.63	3.88	0.63	0.63	3.25	8.20	45TD32
SW2CTA32111-4N4-45-AA			1	2.00	4.00	0.63	3.88	1.13	1.13	4.25	10.14	45TD32
SW2CTA32111-5N4-45-AA			2	2.00	5.00	0.63	3.88	0.75	1.13	4.25	10.14	45TD32
SW2CTA32111-6N4-45-AA			2	2.00	6.00	0.63	3.88	1.25	1.13	4.25	9.20	45TD32
SW2CTA36119-4N-45-AA	1192.5	1113 (45/7)	1	2.25	3.00	0.75	4.00	0.63	0.63	3.25	8.38	45TD36
SW2CTA36119-4N4-45-AA			1	2.25	4.00	0.75	4.00	1.13	1.13	4.25	10.32	45TD36
SW2CTA36119-5N4-45-AA			2	2.25	5.00	0.75	4.00	0.75	1.13	4.25	10.32	45TD36
SW2CTA36119-6N4-45-AA			2	2.25	6.00	0.75	4.00	1.25	1.13	4.25	10.32	45TD36

continued

© 2014, AFL, all rights reserved. PP-3-00651, Revision 4, 5.24.2021
Specifications are subject to change without notice.

TYPE SW2CTA-45-AA
Swage Two Cable 45-Degree Terminal

Ordering Information

AFL NO.	CABLE SIZE		PAD	DIMENSIONS IN INCHES								DIE
	AAC	ACSR	DETAIL	A	B	C	D	E	F	G	H	SIZE
SW2CTA36127-4N-45-AA	1272	1113 (54/19), 1192.5 (45/7)	1	2.25	3.00	0.75	4.00	0.63	0.63	3.25	8.38	45TD36
SW2CTA36127-4N4-45-AA			1	2.25	4.00	0.75	4.00	1.13	1.13	4.25	10.32	45TD36
SW2CTA36127-5N4-45-AA			2	2.25	5.00	0.75	4.00	0.75	1.13	4.25	10.32	45TD36
SW2CTA36127-6N4-45-AA			2	2.25	6.00	0.75	4.00	1.25	1.13	4.25	10.32	45TD36
SW2CTA36135-4N-45-AA	1351.5	1192.5 (54/19), 1272 (45/7)	1	2.25	3.00	0.75	4.00	0.63	0.63	3.25	8.38	45TD36
SW2CTA36135-4N4-45-AA			1	2.25	4.00	0.75	4.00	1.13	1.13	4.25	10.32	45TD36
SW2CTA36135-5N4-45-AA			2	2.25	5.00	0.75	4.00	0.75	1.13	4.25	10.32	45TD36
SW2CTA36135-6N4-45-AA			2	2.25	6.00	0.75	4.00	1.25	1.13	4.25	10.32	45TD36
SW2CTA36143-4N-45-AA	1431	1272 (54/19), 1351.5 (45/7)	1	2.25	3.00	0.75	4.00	0.63	0.63	3.25	8.38	45TD36
SW2CTA36143-4N4-45-AA			1	2.25	4.00	0.75	4.00	1.13	1.13	4.25	10.32	45TD36
SW2CTA36143-5N4-45-AA			2	2.25	5.00	0.75	4.00	0.75	1.13	4.25	10.32	45TD36
SW2CTA36143-6N4-45-AA			2	2.25	6.00	0.75	4.00	1.25	1.13	4.25	10.32	45TD36
SW2CTA36151-4N-45-AA	1510.5	1351.5 (54/19), 1431 (45/7)	1	2.25	3.00	0.75	4.00	0.63	0.63	3.25	8.38	45TD36
SW2CTA36151-4N4-45-AA			1	2.25	4.00	0.75	4.00	1.13	1.13	4.25	10.32	45TD36
SW2CTA36151-5N4-45-AA			2	2.25	5.00	0.75	4.00	0.75	1.13	4.25	10.32	45TD36
SW2CTA36151-6N4-45-AA			2	2.25	6.00	0.75	4.00	1.25	1.13	4.25	10.32	45TD36
SW2CTA36159-4N-45-AA	1590	1431 (54/19), 1510.5 (45/7)	1	2.25	3.00	0.75	4.00	0.63	0.63	3.25	8.38	45TD36
SW2CTA36159-4N4-45-AA			1	2.25	4.00	0.75	4.00	1.13	1.13	4.25	10.32	45TD36
SW2CTA36159-5N4-45-AA			2	2.25	5.00	0.75	4.00	0.75	1.13	4.25	10.32	45TD36
SW2CTA36159-6N4-45-AA			2	2.25	6.00	0.75	4.00	1.25	1.13	4.25	10.32	45TD36
SW2CTA36175-4N-45-AA	1750	1510.5 (54/19), 1590 (45/7)	1	2.25	3.00	0.75	4.00	0.63	0.63	3.25	8.38	45TD36
SW2CTA36175-4N4-45-AA			1	2.25	4.00	0.75	4.00	1.13	1.13	4.25	10.32	45TD36
SW2CTA36175-5N4-45-AA			2	2.25	5.00	0.75	4.00	0.75	1.13	4.25	10.32	45TD36
SW2CTA36175-6N4-45-AA			2	2.25	6.00	0.75	4.00	1.25	1.13	4.25	10.32	45TD36
SW2CTA36180-4N-45-AA	1800	1590 (54/19)	1	2.25	3.00	0.75	4.00	0.63	0.63	3.25	8.38	45TD36
SW2CTA36180-4N4-45-AA			1	2.25	4.00	0.75	4.00	1.13	1.13	4.25	10.32	45TD36
SW2CTA36180-5N4-45-AA			2	2.25	5.00	0.75	4.00	0.75	1.13	4.25	10.32	45TD36
SW2CTA36180-6N4-45-AA			2	2.25	6.00	0.75	4.00	1.25	1.13	4.25	10.32	45TD36
SW2CTA44200-4N-45-AA	2000	1780 (84/19)	1	2.75	3.00	1.00	5.50	0.63	0.63	3.25	10.55	65TD44
SW2CTA44200-4N4-45-AA			1	2.75	4.00	1.00	5.50	1.13	1.13	4.25	10.55	65TD44
SW2CTA44200-5N4-45-AA			2	2.75	5.00	1.00	5.50	0.75	1.13	4.25	10.55	65TD44
SW2CTA44200-6N4-45-AA			2	2.75	6.00	1.00	5.50	1.25	1.13	4.25	10.55	65TD44
SW2CTA44230-4N-45-AA	2250	2156 (84/19), 2167 (72/7)	1	2.75	3.00	1.00	5.50	0.63	0.63	3.25	10.55	65TD44
SW2CTA44230-4N4-45-AA			1	2.75	4.00	1.00	5.50	1.13	1.13	4.25	10.55	65TD44
SW2CTA44230-5N4-45-AA			2	2.75	5.00	1.00	5.50	0.75	1.13	4.25	10.55	65TD44
SW2CTA44230-6N4-45-AA			2	2.75	6.00	1.00	5.50	1.25	1.13	4.25	10.55	65TD44
SW2CTA44250-4N-45-AA	2500	2312 (76/19)	1	2.75	3.00	1.00	5.50	0.63	0.63	3.25	10.55	65TD44
SW2CTA44250-4N4-45-AA			1	2.75	4.00	1.00	5.50	1.13	1.13	4.25	10.55	65TD44
SW2CTA44250-5N4-45-AA			2	2.75	5.00	1.00	5.50	0.75	1.13	4.25	10.55	65TD44
SW2CTA44250-6N4-45-AA			2	2.75	6.00	1.00	5.50	1.25	1.13	4.25	10.55	65TD44

© 2014, AFL, all rights reserved. PP-3-00651, Revision 4, 5.24.2021
Specifications are subject to change without notice.

TYPE SW2CTA-90-AA

Swage Two Cable 90-Degree Terminal

A swage type two cable 90 degree terminals on a nema pad.

Material

Aluminum Alloy

Notes

- Prefilled with AFL Filler Compound (AFC) and capped.
- For Electro Tin plate add "-SN" to AFL No.
  EX: SW2CTA2026-4N-90-AA-SN
- For 5 inch, 6 inch, 8 inch or 18 inch cable spacing add "-XX" to AFL No.
  EX: SW2CTA2026-18-4N-90-AA

ƒ —Machine Finish

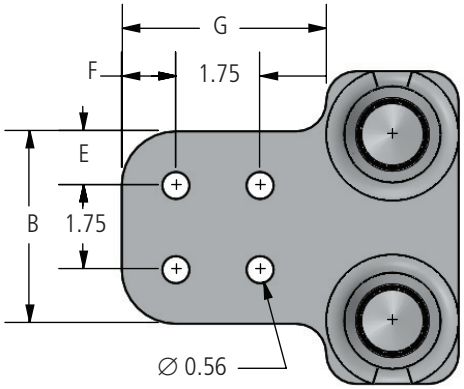

Pad Detail 1

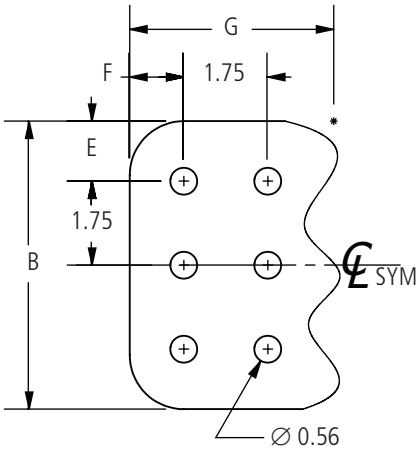

Pad Detail 2

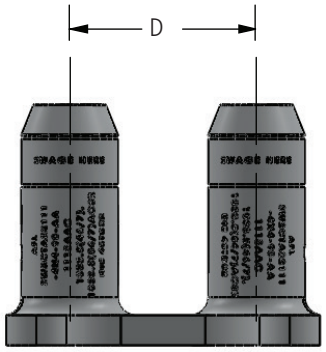

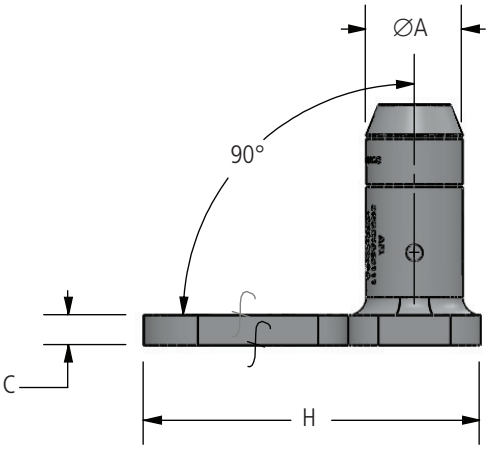

continued

© 2014, AFL, all rights reserved. PP-3-00652, Revision 5, 3.24.2023
Specifications are subject to change without notice.

TYPE SW2CTA-90-AA

Swage Two Cable 90-Degree Terminal

Ordering Information

AFL NO.	CABLE SIZE		PAD	DIMENSIONS IN INCHES								DIE
	AAC	ACSR	DETAIL	A	B	C	D	E	F	G	H	SIZE
SW2CTA1613-4N-90-AA	2/0	1/0 (6/1)	1	1.00	3.00	0.50	2.75	0.63	0.63	3.25	5.00	45TD16
SW2CTA1613-4N4-90-AA			1	1.00	4.00	0.50	2.75	1.13	1.13	5.56	6.00	45TD16
SW2CTA1613-5N4-90-AA			2	1.00	5.00	0.50	2.75	0.75	1.13	5.56	6.00	45TD16
SW2CTA1613-6N4-90-AA			2	1.00	6.00	0.50	2.75	1.25	1.13	5.56	6.00	45TD16
SW2CTA1617-4N-90-AA	3/0	2/0 (6/1)	1	1.00	3.00	0.50	2.75	0.63	0.63	4.56	5.00	45TD16
SW2CTA1617-4N4-90-AA			1	1.00	4.00	0.50	2.75	1.13	1.13	5.56	6.00	45TD16
SW2CTA1617-5N4-90-AA			2	1.00	5.00	0.50	2.75	0.75	1.13	5.56	6.00	45TD16
SW2CTA1617-6N4-90-AA			2	1.00	6.00	0.50	2.75	1.25	1.13	5.56	6.00	45TD16
SW2CTA1621-4N-90-AA	4/0	3/0 (6/1)	1	1.00	3.00	0.50	2.75	0.63	0.63	4.56	5.00	45TD16
SW2CTA1621-4N4-90-AA			1	1.00	4.00	0.50	2.75	1.13	1.13	5.56	6.00	45TD16
SW2CTA1621-5N4-90-AA			2	1.00	5.00	0.50	2.75	0.75	1.13	5.56	6.00	45TD16
SW2CTA1621-6N4-90-AA			2	1.00	6.00	0.50	2.75	1.25	1.13	5.56	6.00	45TD16
SW2CTA1625-4N-90-AA	250	4/0 (6/1)	1	1.00	3.00	0.50	2.75	0.63	0.63	4.56	5.00	45TD16
SW2CTA1625-4N4-90-AA			1	1.00	4.00	0.50	2.75	1.13	1.13	5.56	6.00	45TD16
SW2CTA1625-5N4-90-AA			2	1.00	5.00	0.50	2.75	0.75	1.13	5.56	6.00	45TD16
SW2CTA1625-6N4-90-AA			2	1.00	6.00	0.50	2.75	1.25	1.13	5.56	6.00	45TD16
SW2CTA2026-4N-90-AA	266.8	266.8 (18/1)	1	1.25	3.00	0.50	2.75	0.63	0.63	4.45	5.00	45TD20
SW2CTA2026-4N4-90-AA			1	1.25	4.00	0.50	2.75	1.13	1.13	5.45	6.00	45TD20
SW2CTA2026-5N4-90-AA			2	1.25	5.00	0.50	2.75	0.75	1.13	5.45	6.00	45TD20
SW2CTA2026-6N4-90-AA			2	1.25	6.00	0.50	2.75	1.25	1.13	5.45	6.00	45TD20
SW2CTA2030-4N-90-AA	300	266.8 (26/7)	1	1.25	3.00	0.50	2.75	0.63	0.63	4.45	5.00	45TD20
SW2CTA2030-4N4-90-AA			1	1.25	4.00	0.50	2.75	1.13	1.13	5.45	6.00	45TD20
SW2CTA2030-5N4-90-AA			2	1.25	5.00	0.50	2.75	0.75	1.13	5.45	6.00	45TD20
SW2CTA2030-6N4-90-AA			2	1.25	6.00	0.50	2.75	1.25	1.13	5.45	6.00	45TD20
SW2CTA2035-4N-90-AA	336.4, 350	300 (26/7), 336.4 (18/1)	1	1.25	3.00	0.50	2.75	0.63	0.63	4.45	5.00	45TD20
SW2CTA2035-4N4-90-AA			1	1.25	4.00	0.50	2.75	1.13	1.13	5.45	6.00	45TD20
SW2CTA2035-5N4-90-AA			2	1.25	5.00	0.50	2.75	0.75	1.13	5.45	6.00	45TD20
SW2CTA2035-6N4-90-AA			2	1.25	6.00	0.50	2.75	1.25	1.13	5.45	6.00	45TD20
SW2CTA2039-4N-90-AA	397.5	336.4 (26/7), 336.4 (30/7), 397.5 (18/1)	1	1.25	3.00	0.50	2.75	0.63	0.63	4.45	5.00	45TD20
SW2CTA2039-4N4-90-AA			1	1.25	4.00	0.50	2.75	1.13	1.13	5.45	6.00	45TD20
SW2CTA2039-5N4-90-AA			2	1.25	5.00	0.50	2.75	0.75	1.13	5.45	6.00	45TD20
SW2CTA2039-6N4-90-AA			2	1.25	6.00	0.50	2.75	1.25	1.13	5.45	6.00	45TD20
SW2CTA2445-4N-90-AA	450	397.5 (24/7), 397.5 (26/7)	1	1.50	3.00	0.50	3.63	0.63	0.63	4.34	5.00	45TD24
SW2CTA2445-4N4-90-AA			1	1.50	4.00	0.50	3.63	1.13	1.13	5.34	6.00	45TD24
SW2CTA2445-5N4-90-AA			2	1.50	5.00	0.50	3.63	0.75	1.13	5.34	6.00	45TD24
SW2CTA2445-6N4-90-AA			2	1.50	6.00	0.50	3.63	1.25	1.13	5.97	7.00	45TD24
SW2CTA2447-4N-90-AA	477	397.5 (30/7)	1	1.50	3.00	0.50	3.63	0.63	0.63	4.34	5.00	45TD24
SW2CTA2447-4N4-90-AA			1	1.50	4.00	0.50	3.63	1.13	1.13	5.34	6.00	45TD24
SW2CTA2447-5N4-90-AA			2	1.50	5.00	0.50	3.63	0.75	1.13	5.34	6.00	45TD24
SW2CTA2447-6N4-90-AA			2	1.50	6.00	0.50	3.63	1.25	1.13	5.97	7.00	45TD24
SW2CTA2450-4N-90-AA	500	477 (18/1)	1	1.50	3.00	0.50	3.63	0.63	0.63	4.34	5.00	45TD24
SW2CTA2450-4N4-90-AA			1	1.50	4.00	0.50	3.63	1.13	1.13	5.34	6.00	45TD24
SW2CTA2450-5N4-90-AA			2	1.50	5.00	0.50	3.63	0.75	1.13	5.34	6.00	45TD24
SW2CTA2450-6N4-90-AA			2	1.50	6.00	0.50	3.63	1.25	1.13	5.97	7.00	45TD24
SW2CTA2455-4N-90-AA	556.5	477 (24/7), 477 (26/7)	1	1.50	3.00	0.50	3.63	0.63	0.63	4.34	5.00	45TD24
SW2CTA2455-4N4-90-AA			1	1.50	4.00	0.50	3.63	1.13	1.13	5.34	6.00	45TD24
SW2CTA2455-5N4-90-AA			2	1.50	5.00	0.50	3.63	0.75	1.13	5.34	6.00	45TD24
SW2CTA2455-6N4-90-AA			2	1.50	6.00	0.50	3.63	1.25	1.13	5.97	7.00	45TD24

continued

© 2014, AFL, all rights reserved. PP-3-00652, Revision 5, 3.24.2023
Specifications are subject to change without notice.

TYPE SW2CTA-90-AA
Swage Two Cable 90-Degree Terminal

Ordering Information

AFL NO.	CABLE SIZE		PAD	DIMENSIONS IN INCHES								DIE
	AAC	ACSR	DETAIL	A	B	C	D	E	F	G	H	SIZE
SW2CTA2860-4N-90-AA	600	477 (30/7), 556.5 (18/1)	1	1.75	3.00	0.63	3.75	0.63	0.63	4.80	6.00	45TD28
SW2CTA2860-4N4-90-AA			1	1.75	4.00	0.63	3.75	1.13	1.13	6.36	8.00	45TD28
SW2CTA2860-5N4-90-AA			2	1.75	5.00	0.63	3.75	0.75	1.13	6.36	8.00	45TD28
SW2CTA2860-6N4-90-AA			2	1.75	6.00	0.63	3.75	1.25	1.13	5.80	7.00	45TD28
SW2CTA2863-4N-90-AA	636	556.5 (24/7), 556.5 (26/7)	1	1.75	3.00	0.63	3.75	0.63	0.63	4.80	6.00	45TD28
SW2CTA2863-4N4-90-AA			1	1.75	4.00	0.63	3.75	1.13	1.13	6.36	8.00	45TD28
SW2CTA2863-5N4-90-AA			2	1.75	5.00	0.63	3.75	0.75	1.13	6.36	8.00	45TD28
SW2CTA2863-6N4-90-AA			2	1.75	6.00	0.63	3.75	1.25	1.13	5.80	7.00	45TD28
SW2CTA2871-4N-90-AA	700, 715.5	556.5 (30/7), 605 (24/7), 605 (26/7), 636 (18/1), 636 (36/1)	1	1.75	3.00	0.63	3.75	0.63	0.63	4.80	6.00	45TD28
SW2CTA2871-4N4-90-AA			1	1.75	4.00	0.63	3.75	1.13	1.13	6.36	8.00	45TD28
SW2CTA2871-5N4-90-AA			2	1.75	5.00	0.63	3.75	0.75	1.13	6.36	8.00	45TD28
SW2CTA2871-6N4-90-AA			2	1.75	6.00	0.63	3.75	1.25	1.13	5.80	7.00	45TD28
SW2CTA3075-4N-90-AA	750	605 (30/7), 605 (30/19), 636 (24/7), 636 (26/7)	1	1.88	3.00	0.63	3.88	0.63	0.63	4.71	6.00	45TD30
SW2CTA3075-4N4-90-AA			1	1.88	4.00	0.63	3.88	1.13	1.13	6.24	8.00	45TD30
SW2CTA3075-5N4-90-AA			2	1.88	5.00	0.63	3.88	0.75	1.13	6.24	8.00	45TD30
SW2CTA3075-6N4-90-AA			2	1.88	6.00	0.63	3.88	1.25	1.13	5.71	7.00	45TD30
SW2CTA3079-4N-90-AA	795	636 (30/7), 636 (30/19), 715.5 (24/7), 715.5 (54/7), 795 (36/1)	1	1.88	3.00	0.63	3.88	0.63	0.63	4.71	6.00	45TD30
SW2CTA3079-4N4-90-AA			1	1.88	4.00	0.63	3.88	1.13	1.13	6.24	8.00	45TD30
SW2CTA3079-5N4-90-AA			2	1.88	5.00	0.63	3.88	0.75	1.13	6.24	8.00	45TD30
SW2CTA3079-6N4-90-AA			2	1.88	6.00	0.63	3.88	1.25	1.13	5.71	7.00	45TD30
SW2CTA3087-4N-90-AA	874.5	715.5 (26/7), 715.5 (30/19), 795 (45/7)	1	1.88	3.00	0.63	3.88	0.63	0.63	4.71	6.00	45TD30
SW2CTA3087-4N4-90-AA			1	1.88	4.00	0.63	3.88	1.13	1.13	6.24	8.00	45TD30
SW2CTA3087-5N4-90-AA			2	1.88	5.00	0.63	3.88	0.75	1.13	6.24	8.00	45TD30
SW2CTA3087-6N4-90-AA			2	1.88	6.00	0.63	3.88	1.25	1.13	5.71	7.00	45TD30
SW2CTA3290-4N-90-AA	900	795 (24/7), 795 (54/7), 795 (26/7)	1	2.00	3.00	0.63	3.88	0.63	0.63	4.63	6.00	45TD32
SW2CTA3290-4N4-90-AA			1	2.00	4.00	0.63	3.88	1.13	1.13	6.13	8.00	45TD32
SW2CTA3290-5N4-90-AA			2	2.00	5.00	0.63	3.88	0.75	1.13	6.13	8.00	45TD32
SW2CTA3290-6N4-90-AA			2	2.00	6.00	0.63	3.88	1.25	1.13	6.13	8.00	45TD32
SW2CTA3295-4N-90-AA	954	795 (30/19), 900 (45/7)	1	2.00	3.00	0.63	3.88	0.63	0.63	4.63	6.00	45TD32
SW2CTA3295-4N4-90-AA			1	2.00	4.00	0.63	3.88	1.13	1.13	6.13	8.00	45TD32
SW2CTA3295-5N4-90-AA			2	2.00	5.00	0.63	3.88	0.75	1.13	6.13	8.00	45TD32
SW2CTA3295-6N4-90-AA			2	2.00	6.00	0.63	3.88	1.25	1.13	5.63	7.00	45TD32
SW2CTA32100-4N-90-AA	1000	874.5 (54/7), 900 (54/7), 954 (45/7)	1	2.00	3.00	0.63	3.88	0.63	0.63	4.63	6.00	45TD32
SW2CTA32100-4N4-90-AA			1	2.00	4.00	0.63	3.88	1.13	1.13	6.13	8.00	45TD32
SW2CTA32100-5N4-90-AA			2	2.00	5.00	0.63	3.88	0.75	1.13	6.13	8.00	45TD32
SW2CTA32100-6N4-90-AA			2	2.00	6.00	0.63	3.88	1.25	1.13	5.63	7.00	45TD32
SW2CTA32103-4N-90-AA	1033.5	954 (54/7)	1	2.00	3.00	0.63	3.88	0.63	0.63	4.63	6.00	45TD32
SW2CTA32103-4N4-90-AA			1	2.00	4.00	0.63	3.88	1.13	1.13	6.13	8.00	45TD32
SW2CTA32103-5N4-90-AA			2	2.00	5.00	0.63	3.88	0.75	1.13	6.13	8.00	45TD32
SW2CTA32103-6N4-90-AA			2	2.00	6.00	0.63	3.88	1.25	1.13	5.63	7.00	45TD32
SW2CTA32111-4N-90-AA	1113	1033.5 (45/7), 1033.5 (54/7)	1	2.00	3.00	0.63	3.88	0.63	0.63	4.63	6.00	45TD32
SW2CTA32111-4N4-90-AA			1	2.00	4.00	0.63	3.88	1.13	1.13	6.13	8.00	45TD32
SW2CTA32111-5N4-90-AA			2	2.00	5.00	0.63	3.88	0.75	1.13	6.13	8.00	45TD32
SW2CTA32111-6N4-90-AA			2	2.00	6.00	0.63	3.88	1.25	1.13	5.63	7.00	45TD32

continued

© 2014, AFL, all rights reserved. PP-3-00652, Revision 5, 3.24.2023
Specifications are subject to change without notice.

TYPE SW2CTA-90-AA
Swage Two Cable 90-Degree Terminal

Ordering Information

AFL NO.	CABLE SIZE		PAD	DIMENSIONS IN INCHES								DIE
	AAC	ACSR	DETAIL	A	B	C	D	E	F	G	H	SIZE
SW2CTA36119-4N-90-AA	1192.5	1113 (45/7)	1	2.25	3.00	0.75	4.00	0.63	0.63	4.45	6.00	45TD36
SW2CTA36119-4N4-90-AA			1	2.25	4.00	0.75	4.00	1.13	1.13	5.89	8.00	45TD36
SW2CTA36119-5N4-90-AA			2	2.25	5.00	0.75	4.00	0.75	1.13	5.89	8.00	45TD36
SW2CTA36119-6N4-90-AA			2	2.25	6.00	0.75	4.00	1.25	1.13	5.89	8.00	45TD36
SW2CTA36127-4N-90-AA	1272	1113 (54/19), 1192.5 (45/7)	1	2.25	3.00	0.75	4.00	0.63	0.63	4.45	6.00	45TD36
SW2CTA36127-4N4-90-AA			1	2.25	4.00	0.75	4.00	1.13	1.13	5.89	8.00	45TD36
SW2CTA36127-5N4-90-AA			2	2.25	5.00	0.75	4.00	0.75	1.13	5.89	8.00	45TD36
SW2CTA36127-6N4-90-AA			2	2.25	6.00	0.75	4.00	1.25	1.13	5.89	8.00	45TD36
SW2CTA36135-4N-90-AA	1351.5	1192.5 (54/19), 1272 (45/7)	1	2.25	3.00	0.75	4.00	0.63	0.63	4.45	6.00	45TD36
SW2CTA36135-4N4-90-AA			1	2.25	4.00	0.75	4.00	1.13	1.13	5.89	8.00	45TD36
SW2CTA36135-5N4-90-AA			2	2.25	5.00	0.75	4.00	0.75	1.13	5.89	8.00	45TD36
SW2CTA36135-6N4-90-AA			2	2.25	6.00	0.75	4.00	1.25	1.13	5.89	8.00	45TD36
SW2CTA36143-4N-90-AA	1431	1272 (54/19), 1351.5 (45/7)	1	2.25	3.00	0.75	4.00	0.63	0.63	4.45	6.00	45TD36
SW2CTA36143-4N4-90-AA			1	2.25	4.00	0.75	4.00	1.13	1.13	5.89	8.00	45TD36
SW2CTA36143-5N4-90-AA			2	2.25	5.00	0.75	4.00	0.75	1.13	5.89	8.00	45TD36
SW2CTA36143-6N4-90-AA			2	2.25	6.00	0.75	4.00	1.25	1.13	5.89	8.00	45TD36
SW2CTA36151-4N-90-AA	1510.5	1351.5 (54/19), 1431 (45/7)	1	2.25	3.00	0.75	4.00	0.63	0.63	4.45	6.00	45TD36
SW2CTA36151-4N4-90-AA			1	2.25	4.00	0.75	4.00	1.13	1.13	5.89	8.00	45TD36
SW2CTA36151-5N4-90-AA			2	2.25	5.00	0.75	4.00	0.75	1.13	5.89	8.00	45TD36
SW2CTA36151-6N4-90-AA			2	2.25	6.00	0.75	4.00	1.25	1.13	5.89	8.00	45TD36
SW2CTA36159-4N-90-AA	1590	1431 (54/19), 1510.5 (45/7)	1	2.25	3.00	0.75	4.00	0.63	0.63	4.45	6.00	45TD36
SW2CTA36159-4N4-90-AA			1	2.25	4.00	0.75	4.00	1.13	1.13	5.89	8.00	45TD36
SW2CTA36159-5N4-90-AA			2	2.25	5.00	0.75	4.00	0.75	1.13	5.89	8.00	45TD36
SW2CTA36159-6N4-90-AA			2	2.25	6.00	0.75	4.00	1.25	1.13	5.89	8.00	45TD36
SW2CTA36175-4N-90-AA	1750	1510.5 (54/19), 1590 (45/7)	1	2.25	3.00	0.75	4.00	0.63	0.63	4.45	6.00	45TD36
SW2CTA36175-4N4-90-AA			1	2.25	4.00	0.75	4.00	1.13	1.13	5.89	8.00	45TD36
SW2CTA36175-5N4-90-AA			2	2.25	5.00	0.75	4.00	0.75	1.13	5.89	8.00	45TD36
SW2CTA36175-6N4-90-AA			2	2.25	6.00	0.75	4.00	1.25	1.13	5.89	8.00	45TD36
SW2CTA36180-4N-90-AA	1800	1590 (54/19)	1	2.25	3.00	0.75	4.00	0.63	0.63	4.45	6.00	45TD36
SW2CTA36180-4N4-90-AA			1	2.25	4.00	0.75	4.00	1.13	1.13	5.89	8.00	45TD36
SW2CTA36180-5N4-90-AA			2	2.25	5.00	0.75	4.00	0.75	1.13	5.89	8.00	45TD36
SW2CTA36180-6N4-90-AA			2	2.25	6.00	0.75	4.00	1.25	1.13	5.89	8.00	45TD36
SW2CTA44200-4N-90-AA	2000	1780 (84/19)	1	2.75	3.00	1.00	5.50	0.63	0.63	4.73	8.00	65TD44
SW2CTA44200-4N4-90-AA			1	2.75	4.00	1.00	5.50	1.13	1.13	5.42	8.00	65TD44
SW2CTA44200-5N4-90-AA			2	2.75	5.00	1.00	5.50	0.75	1.13	5.42	8.00	65TD44
SW2CTA44200-6N4-90-AA			2	2.75	6.00	1.00	5.50	1.25	1.13	5.42	8.00	65TD44
SW2CTA44230-4N-90-AA	2250	2156 (84/19), 2167 (72/7)	1	2.75	3.00	1.00	5.50	0.63	0.63	4.73	8.00	65TD44
SW2CTA44230-4N4-90-AA			1	2.75	4.00	1.00	5.50	1.13	1.13	5.42	8.00	65TD44
SW2CTA44230-5N4-90-AA			2	2.75	5.00	1.00	5.50	0.75	1.13	5.42	8.00	65TD44
SW2CTA44230-6N4-90-AA			2	2.75	6.00	1.00	5.50	1.25	1.13	5.42	8.00	65TD44
SW2CTA44250-4N-90-AA	2500	2312 (76/19)	1	2.75	3.00	1.00	5.50	0.63	0.63	4.73	8.00	65TD44
SW2CTA44250-4N4-90-AA			1	2.75	4.00	1.00	5.50	1.13	1.13	5.42	8.00	65TD44
SW2CTA44250-5N4-90-AA			2	2.75	5.00	1.00	5.50	0.75	1.13	5.42	8.00	65TD44
SW2CTA44250-6N4-90-AA			2	2.75	6.00	1.00	5.50	1.25	1.13	5.42	8.00	65TD44

© 2014, AFL, all rights reserved. PP-3-00652, Revision 5, 3.24.2023
Specifications are subject to change without notice.

TYPE SW3CT-AA

Swage Three Cable Offset Terminal

A swage type three cable offset terminals on a nema pad.

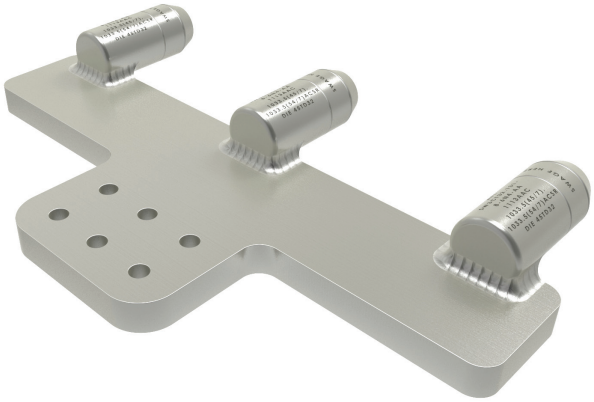

Material

Aluminum Alloy

Notes

- Prefilled with AFL Filler Compound (AFC) and capped.
- For Electro Tin plate add "-SN" to AFL No.
  EX: SW3CT2039-8-6N4-AA-SN

ƒ —Machine Finish

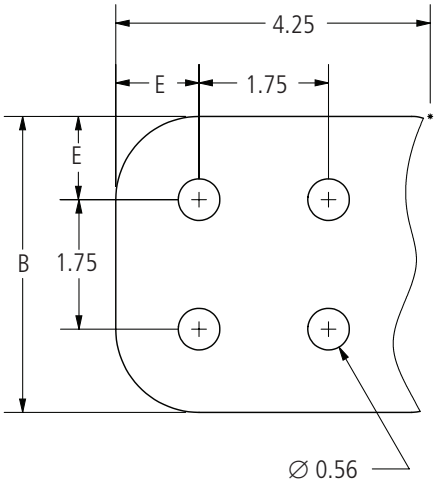

Pad Detail 1

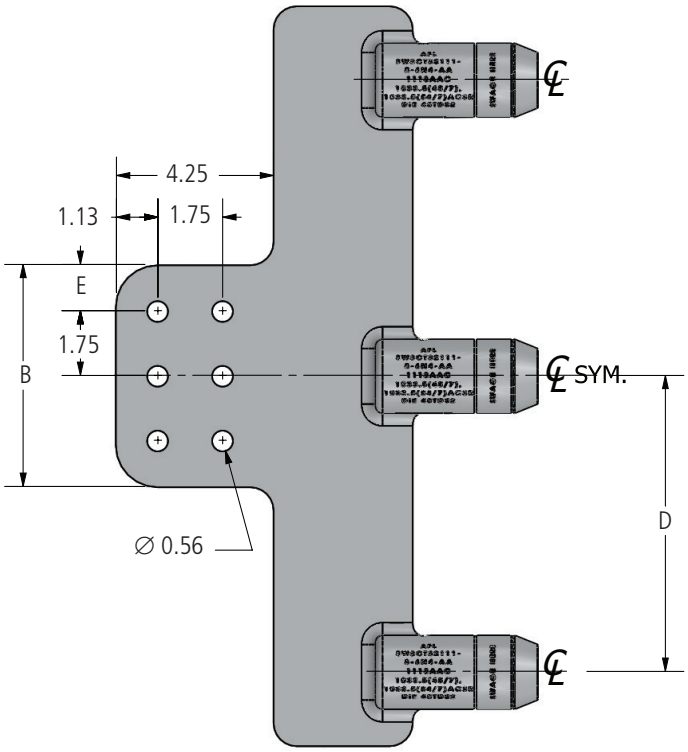

Pad Detail 2

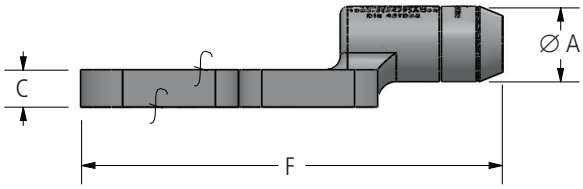

continued
→

© 2014, AFL, all rights reserved. PP-3-00782, Revision 3, 3.2.2023
Specifications are subject to change without notice.

TYPE SW3CT-AA
Swage Three Cable Offset Terminal

Ordering Information

AFL NO.	CABLE RANGE		PAD DETAIL	DIMENSIONS IN INCHES						DIE SIZE
	AAC	ACSR		A	B	C	D	E	F	
SW3CT2039-8-6N4-AA	397.5	336.4 (26/7), 336.4 (30/7), 397.5 (18/1)	2	1.25	6.00	0.75	8.00	1.25	11.25	45TD20
SW3CT2871-8-6N4-AA	700, 715.5	556.5 (30/7), 605 (24/7), 605 (26/7), 636 (18/1), 636 (36/1)	2	1.75	6.00	1.25	8.00	1.25	11.25	45TD28
SW3CT3075-8-6N4-AA	750	605 (30/7), 605 (30/19), 636 (24/7), 636 (26/7)	2	1.88	6.00	1.00	8.00	1.25	11.25	45TD30
SW3CT3075-18-6N4-AA			2	1.88	6.00	1.00	18.00	1.25	11.25	45TD30
SW3CT3079-8-4N4-AA	795	636 (30/7), 636 (30/19), 715.5 (24/7), 715.5 (54/7), 795 (36/1)	1	1.88	4.00	1.00	8.00	1.13	11.25	45TD30
SW3CT3079-8-6N4-AA			2	1.88	6.00	1.00	8.00	1.25	11.25	45TD30
SW3CT3079-18-6N4-AA			2	1.88	6.00	1.00	18.00	1.25	11.25	45TD30
SW3CT3087-8-6N4-AA	874.5	715.5 (26/7), 715.5 (30/19), 795 (45/7)	2	1.88	6.00	1.25	8.00	1.25	11.25	45TD30
SW3CT3087-18-6N4-AA			2	1.88	6.00	1.00	18.00	1.25	11.25	45TD30
SW3CT32111-8-6N4-AA	1113	1033.5 (45/7), 1033.5 (54/7)	2	2.00	6.00	1.00	8.00	1.25	11.38	45TD32
SW3CT32111-18-6N4-AA			2	2.00	6.00	1.00	18.00	1.25	11.38	45TD32
SW3CT36127-4-6N4-AA	1272	1113 (54/19), 1192.5 (45/7)	2	2.25	6.00	1.00	4.00	1.25	11.75	45TD36
SW3CT36127-8-6N4-AA			2	2.25	6.00	1.00	8.00	1.25	11.75	45TD36
SW3CT36127-18-6N4-AA			2	2.25	6.00	1.00	18.00	1.25	11.75	45TD36
SW3CT36143-8-6N4-AA	1431	1272 (54/19), 1351.5 (45/7)	2	2.25	6.00	1.25	8.00	1.25	11.75	45TD36
SW3CT36143-18-6N4-AA			2	2.25	6.00	1.00	18.00	1.25	11.75	45TD36
SW3CT36151-8-6N4-AA	1510.5	1351.5 (54/19), 1431 (45/7)	2	2.25	6.00	1.00	8.00	1.25	11.75	45TD36
SW3CT36151-18-6N4-AA			2	2.25	6.00	1.00	18.00	1.25	11.75	45TD36
SW3CT36159-4-4N-AA	1590	1431 (54/19), 1510.5 (45/7)	1	2.25	3.00	1.00	4.00	0.63	8.75	45TD36
SW3CT36159-4-4N4-AA			1	2.25	4.00	1.00	4.00	1.13	11.75	45TD36
SW3CT36175-8-6N4-AA	1750	1510.5 (54/19), 1590 (45/7)	2	2.25	6.00	1.00	8.00	1.25	11.75	45TD36
SW3CT36175-18-6N4-AA			2	2.25	6.00	1.00	18.00	1.25	11.75	45TD36
SW3CT44200-8-4N4-AA	2000	1780 (84/19)	1	2.75	4.00	1.00	8.00	1.13	12.38	65TD44
SW3CT44200-18-4N4-AA			1	2.75	4.00	1.00	18.00	1.13	12.38	65TD44
SW3CT44230-8-4N4-AA	2250	2156 (84/19), 2167 (72/7)	1	2.75	4.00	1.00	8.00	1.13	12.38	65TD44
SW3CT44230-18-4N4-AA			1	2.75	4.00	1.00	18.00	1.13	12.38	65TD44
SW3CT44230-8-6N4-AA			2	2.75	6.00	1.25	8.00	1.25	12.38	65TD44
SW3CT44230-18-6N4-AA			2	2.75	6.00	1.00	18.00	1.25	12.38	65TD44
SW3CT44250-8-4N4-AA	2500	2312 (76/19)	1	2.75	4.00	1.00	8.00	1.13	12.38	65TD44
SW3CT44250-18-4N4-AA			1	2.75	4.00	1.00	18.00	1.13	12.38	65TD44
SW3CT44250-8-6N4-AA			2	2.75	6.00	1.00	8.00	1.25	12.38	65TD44
SW3CT44250-18-6N4-AA			2	2.75	6.00	1.00	18.00	1.25	12.38	65TD44

© 2014, AFL, all rights reserved. PP-3-00782, Revision 3, 3.2.2023
Specifications are subject to change without notice.

TYPE SW3CTA-45-AA

Swage Three Cable 45-Degree Terminal

A swage type three cable angled terminals on a nema pad.

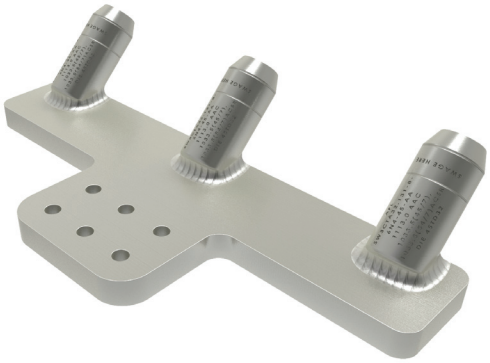

Material

Aluminum Alloy

Notes

- Prefilled with AFL Filler Compound (AFC) and capped.
- For Electro Tin plate add "-SN" to AFL No.
  EX: SW3CTA44225-8-6N4-90-AA-SN

ƒ —Machine Finish

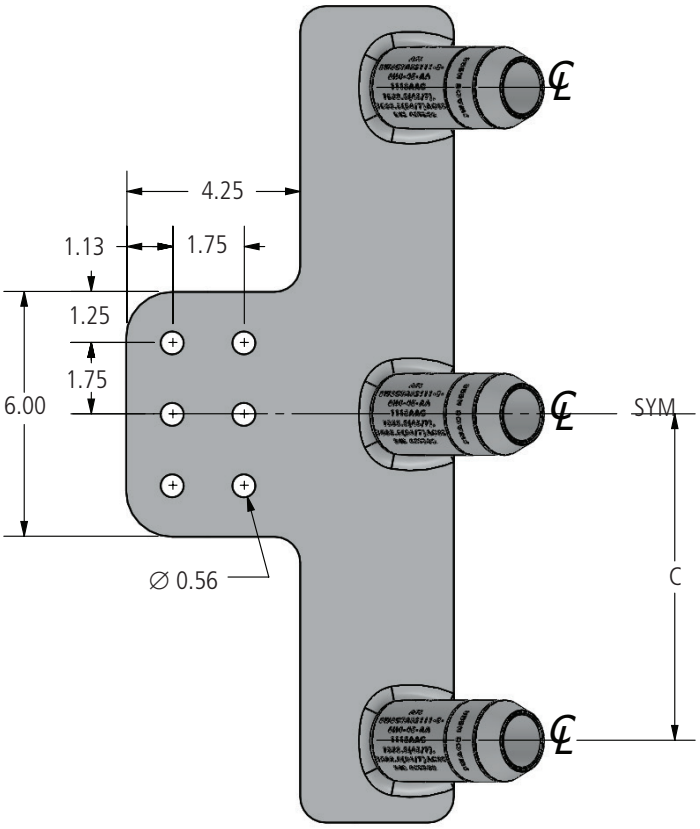

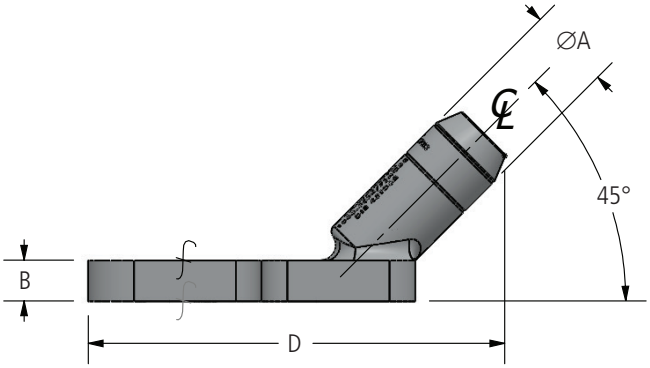

continued

© 2014, AFL, all rights reserved. PP-3-00678, Revision 2, 3.27.2023
Specifications are subject to change without notice.

TYPE SW3CTA-45-AA

Swage Three Cable 45-Degree Terminal

Ordering Information

AFL NO.	CABLE RANGE		DIMENSIONS IN INCHES				DIE SIZE
	AAC	ACSR	A	B	C	D	
SW3CTA2039-8-6N4-45-AA	397.5	336.4 (26/7), 336.4 (30/7), 397.5 (18/1)	1.25	0.75	8.00	10.09	45TD20
SW3CTA2871-8-6N4-45-AA	700, 715.5	556.5 (30/7), 605 (24/7), 605 (26/7), 636 (18/1), 636 (36/1)	1.75	1.00	8.00	10.20	45TD28
SW3CTA3075-8-6N4-45-AA	750	605 (30/7), 605 (30/19), 636 (24/7), 636 (26/7)	1.88	1.00	8.00	10.16	45TD30
SW3CTA3075-18-6N4-45-AA			1.88	1.00	18.00	10.16	45TD30
SW3CTA3079-8-6N4-45-AA	795	636 (30/7), 636 (30/19), 715.5 (24/7), 715.5 (54/7), 795 (36/1)	1.88	1.00	8.00	10.16	45TD30
SW3CTA3079-18-6N4-45-AA			1.88	1.00	18.00	10.16	45TD30
SW3CTA3087-8-6N4-45-AA	874.5	715.5 (26/7), 715.5 (30/19), 795 (45/7)	1.88	1.00	8.00	10.16	45TD30
SW3CTA3087-18-6N4-45-AA			1.88	1.00	18.00	10.16	45TD30
SW3CTA32111-8-6N4-45-AA	1113	1033.5 (45/7), 1033.5 (54/7)	2.00	1.00	8.00	10.20	45TD32
SW3CTA32111-18-6N4-45-AA			2.00	1.00	18.00	10.20	45TD32
SW3CTA36127-8-6N4-45-AA	1272	1113 (54/19), 1192.5 (45/7)	2.25	1.00	8.00	10.38	45TD36
SW3CTA36127-18-6N4-45-AA			2.25	1.00	18.00	10.38	45TD36
SW3CTA36143-8-6N4-45-AA	1431	1272 (54/19), 1351.5 (45/7)	2.25	1.00	8.00	10.38	45TD36
SW3CTA36143-18-6N4-45-AA			2.25	1.00	18.00	10.38	45TD36
SW3CTA36151-8-6N4-45-AA	1510.5	1351.5 (54/19), 1431 (45/7)	2.25	1.00	8.00	10.38	45TD36
SW3CTA36151-18-6N4-45-AA			2.25	1.00	18.00	10.38	45TD36
SW3CTA44230-8-6N4-45-AA	2250	2156 (84/19), 2167 (72/7)	2.75	1.00	8.00	10.61	65TD44
SW3CTA44230-18-6N4-45-AA			2.75	1.00	18.00	10.61	65TD44
SW3CTA44250-8-6N4-45-AA	2500	2312 (76/19)	2.75	1.00	8.00	10.61	65TD44
SW3CTA44250-18-6N4-45-AA			2.75	1.00	18.00	10.61	65TD44

© 2014, AFL, all rights reserved. PP-3-00678, Revision 2, 3.27.2023
Specifications are subject to change without notice.

TYPE SW3CTA-90-AA

Swage Three Cable 90-Degree Terminal

A swage type three cable 90-degree terminals on a nema pad.

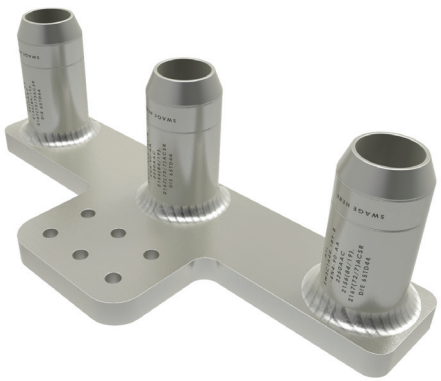

Material

Aluminum Alloy

Notes

- Prefilled with AFL Filler Compound (AFC) and capped.
- For Electro Tin plate add "-SN" to AFL No.
  EX: SW3CTA44225-8-6N4-90-AA-SN

ƒ —Machine Finish

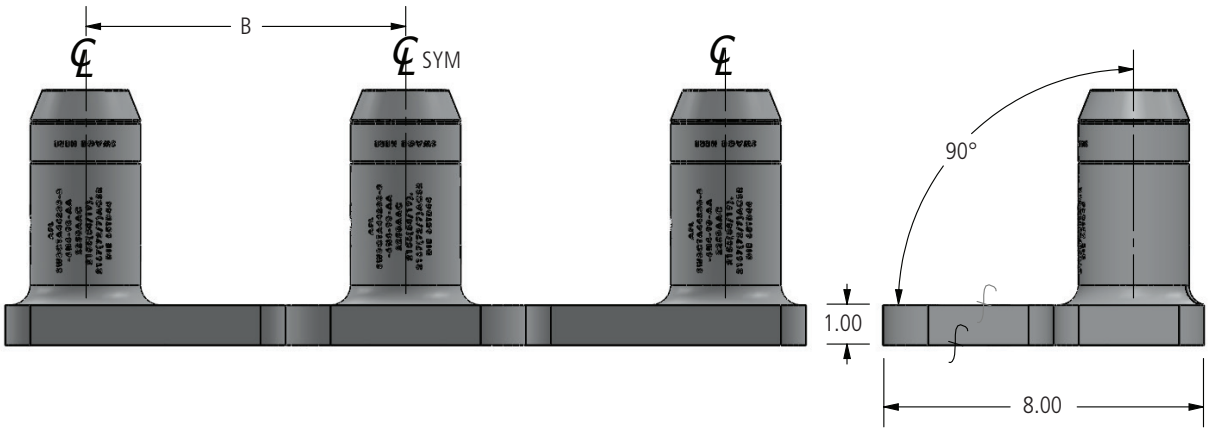

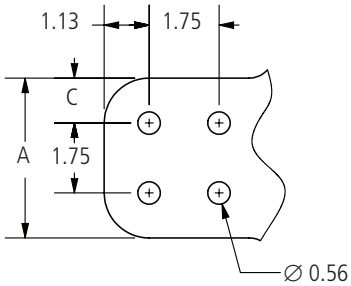

Detail 1

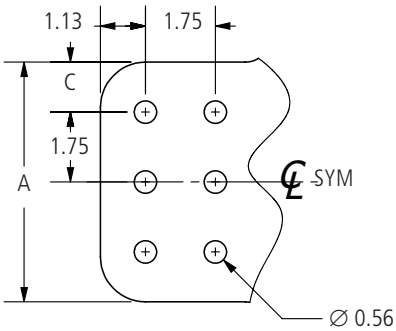

Detail 2

continued

© 2014, AFL, all rights reserved. PP-3-00740, Revision 4, 3.27.2023
Specifications are subject to change without notice.

TYPE SW3CTA-90-AA
Swage Three Cable 90-Degree Terminal

Ordering Information

AFL NO.	CABLE RANGE		DETAIL	DIMENSIONS IN INCHES			DIE SIZE
	AAC	ACSR		A	B	C	
SW3CTA36175-8-6N4-90-AA	1750	1510.5 (54/19), 1590 (45/7)	2	6.00	8.00	1.25	45TD36
SW3CTA44230-8-4N4-90-AA	2250	2156 (84/19), 2167 (72/7)	1	4.00	8.00	1.13	65TD44
SW3CTA44230-18-4N4-90-AA			1	4.00	18.00	1.13	65TD44
SW3CTA44230-8-6N4-90-AA			2	6.00	8.00	1.25	65TD44
SW3CTA44230-18-6N4-90-AA			2	6.00	18.00	1.25	65TD44
SW3CTA44250-8-4N4-90-AA	2500	2312 (76/19)	1	4.00	8.00	1.13	65TD44
SW3CTA44250-18-4N4-90-AA			1	4.00	18.00	1.13	65TD44
SW3CTA44250-8-6N4-90-AA			2	6.00	8.00	1.25	65TD44
SW3CTA44250-18-6N4-90-AA			2	6.00	18.00	1.25	65TD44

© 2014, AFL, all rights reserved. PP-3-00740, Revision 4, 3.27.2023
Specifications are subject to change without notice.